VL3500™ Series Luminaires

USER'S MANUAL

VARI✳LITE® is a trademark owned by Genlyte Thomas Group LLC and is registered in the United States and other countries.

VL1000™, **VL2000™**, **VL2201™**, **VL2202™**, **VL2400™** (and the individual product designations), **VL3000™**, **VL3500™, Series 1000™**, **Series 2000™**, **Series 3000™**, **DICHRO✳TUNE™**, **VARI✳IMAGE™**, and the Vari-Lite Asterisk are also trademarks owned by Genlyte Thomas Group LLC.

VARI✳LITE® products are protected by one or more of the following patents, and other pending patent applications worldwide:

U. S. Patents No. 6,123,436; 6,113,252; 6,046,861; 6,031,749; 6,011,640; 5,969,868; 5,959,768; 5,934,794; 5,882,107; 5,829,868; 5,825,548; 5,798,619; 5,774,273; 5,769,527; 5,758,956; 5,728,994; 5,640,061; 5,590,954; 5,454,477; 5,432,691; 5,367,444; 5,329,431; 5,307,295; 5,282,121; 5,278,742; 5,209,560; 5,186,536; 5,073,847; 5,010,459; 4,980,806; 4,972,306; 4,800,474; 4,779,176; 4,701,833; 4,602,321;

U. S. Design Patents No. 439,356; 420,332; 417,300; 415,301; 413,995; 377,338; 366,712; 359,574; 350,408; 347,113;

Australia Patents No. 693,691; 683,695; 667,109; 649,264; 646,588; 586,095; 576,400;

Australia Design Patents No. 128,796; 128,795;

Canada Patents No. 2,070,670; 2,050,375; 1,270,675; 1,259,058;

Canada Design Patents No. 81,234; 81,233; 76,046;

European (UK) Patents No. 0 652 400; 0 586 049; 0 565 218; 0 547 732; 0 534 710; 0 495 305; 0 474 202; 0 379 970; 0 253 082; 0 253 081; 0 248 974; 0 192 882;

Germany Patents No. 694 25 943.8; 693 14 122.0; 692 08 615.3; 692 07 692.1; 691 31 478.0; 691 21 029.2; 690 33 385.4; 37 89 166.9; 37 68 727.1; 37 51 804.6; 37 50 201.8; 35 87 270.5;

Germany Design Patents No. M 98 01 745.4; M 96 04 515.9; M 96 04 514.0; M 94 07 689.8; M 94 02 951.2; M 499 03 583.6; M 498 11 203.9; G 93 12 884.3;

Spain Patents No. 2 090 191; 2 084 289; 2 020 960; 0 548 328;

Spain Utility Model Patent No. 2.031.748;

Spain Design Patents No. 0.137.502; 0.137.501; 0.133.573;

Greece Patent No. 910.400.544;

Japan Patents No. 2,843,696; 2,059,669; 2,055,324; 2,002,168; 1,966,525; 1,889,481; 1,792,721; 1,770,241;

Japan Design Patents No. 985,985-1; 985,985; 947,552; 945,436-1; 945,436; 1,106,089; 1,077,598; 1,072,598; 1,060,414; 1,002,123;

Korea Patents No. 76,310; 42,639; 283,770; 181,180;

Korea Design Patents No. 209,896; 209,895;

Mexico Patent No. 180,148;

Taiwan Patents No. 78,726; 66,975; 65,380; 28,275;

United Kingdom Design Registrations No. 2082526; 2072562; 2056387; 2056386; 2042174; 2038212; 2033108; 2029499.

All other brand or product names which may be mentioned in this manual are trademarks or registered trademarks of their respective companies or organizations.

Vari-Lite
A Division of Genlyte Thomas Group LLC
10911 Petal Street, Dallas, Texas 75238 USA

This manual is for informational use only and is subject to change without notice. Genlyte Thomas assumes no responsibility or liability for any claims resulting from errors or inaccuracies that may appear in this manual.

Version as of: **31-July-2004**

Part number: **02.9678.0019 0**

©2004 Genlyte Thomas Group LLC. All Rights Reserved.

How To Obtain Warranty Service

A copy of the Vari-Lite Limited Warranty was included in the shipping package for this VARI✻LITE® product.

To obtain warranty service, please contact customer service at 1-877-VARI-LITE (1-877-827-4548) / +1-214-647-7880 or customerservice@genlyte.com and request a Return Material Authorization (RMA) for warranty service. You will need to provide the model and serial number of the item being returned, a description of the problem or failure and the name of the registered user or organization. If available, you should have your sales invoice to establish the date of sale as the beginning of the warranty period.

Once you obtain the RMA, pack the unit in a secure shipping container or in its original packing box. Fill out the RMA form included at the end of this manual and place in shipping container along with a copy of your invoice (if available). Write the RMA number legibly on or near the shipping address label and return the unit, freight prepaid to:

Vari-Lite
10911 Petal Street
Dallas, Texas 75238 USA
Attention: Warranty Service

As stated in the warranty, it is required that the shipment be insured and FOB our service center.

Compliance Notice

FCC This equipment has been tested and found to comply with the limits for a Class A digital device pursuant to Part 15 of FCC Rules. These limits are designed to provide reasonable protection against harmful interference when this equipment is operated in a commercial environment. This equipment generates, uses, and can radiate radio frequency energy and, if not installed and used in accordance with Vari-Lite system, service, and safety guidelines, may cause harmful interference to radio communications. Operation of this equipment in a residential area is likely to cause harmful interference, in which case the user will be required to correct the interference at his/her own expense.

CE

Declaration of Conformity

We declare, under our sole responsibility, that this product complies with the relevant clauses of the following standards and harmonized documents:

Safety

EN 60598-1:1997 Luminaire Safety Standard, General Requirements
EN 60598-2 17:1989 Specification for Luminaires for Stage and Studio Lighting

EMC

EN 55022A:1994 Radiated and Conducted Emissions
EN 50082-1:1997 Generic Immunity Standard

We certify that the product conforms to the protection requirements of council directives: 73/23/EEC (LVD) and 89/336/EEC (EMC)

Safety Notice

It is extremely important to read ALL safety information and instructions provided in this manual and any accompanying documentation before installing and operating the products described herein. Heed all cautions and warnings during installation and use of this product.

Safety symbols used throughout this manual are as follows:

CAUTION advising of potential damage to product.

WARNING advising of potential injury or death to persons.

GENERAL INFORMATION PERTAINING TO PROTECTION AGAINST ELECTRICAL SHOCK, FIRE, EXPOSURE TO EXCESSIVE UV RADIATION, AND INJURY TO PERSONS CAN BE FOUND BELOW.

WARNING:
INSTRUCTIONS FOR CONTINUED PROTECTION AGAINST FIRE

1. VARI✻LITE® luminaires have been designed for use with specific lamp types. The VL3000 series luminaire requires an Osram HMI 1200 W/S metal halide lamp. Installing another type of lamp may be hazardous.
2. Luminaires may be mounted on any type of surface as long as mounting instructions are followed. See instructions detailed in this manual.
3. Note distance requirement from combustible materials or illuminated objects for VARI✻LITE® luminaires.

WARNING:
INSTRUCTIONS FOR CONTINUED PROTECTION AGAINST ELECTRICAL SHOCK

1. VARI✻LITE® luminaires are designed for dry locations only. Exposure to rain or moisture may damage luminaire.
2. Disconnect power before servicing any VARI✻LITE® equipment.
3. Servicing to be performed by qualified personnel only.

WARNING:
INSTRUCTIONS FOR CONTINUED PROTECTION AGAINST EXCESSIVE EXPOSURE TO UV RADIATION

1. Many VARI✳LITE® luminaires use a lamp that produces UV radiation. DO NOT look directly at lamp.
2. It is hazardous to operate luminaires without lens or shield. Shields, lenses, or ultraviolet screens shall be changed if they have become visibly damaged to such an extent that their effectiveness is impaired. For example, by cracks or deep scratches.

WARNING:
INSTRUCTIONS FOR PROTECTION AGAINST INJURY TO PERSONS

1. Exterior surfaces of the luminaire will be hot during operation. Use appropriate safety equipment (gloves, eye protection, etc.) when handling and adjusting hot equipment and components.
2. Luminaires will have a hot lamp when operating. Disconnect power and allow lamp to cool before replacing.
3. Arc lamps emit ultraviolet radiation which can cause serious skin burn and eye inflammation. Additionally, arc lamps operate under high pressure at very high temperatures. Should the lamp break, there can exist a danger of personal injury and/or fire from broken lamp particles being discharged.
4. Wear eye protection when relamping.
5. Appropriate safety equipment (gloves, eye protection) should be used when handling damaged lamps.
6. If lamp is touched with bare hands, clean lamp with denatured alcohol and wipe with lint-free cloth before installing or powering up the luminaire.
7. The lamp shall be changed if it has become damaged or thermally deformed.

WARNING:
RF INTERFERENCE

1. This is a Class A product. In a domestic environment this product may cause radio interference, in which case, the user may be required to take adequate measures.

ARC LAMP CHARACTERISTIC CONSIDERATIONS

1. Arc lamps require a period of time to relight after a power interruption or a severe voltage dip. In some cases, lamp will automatically relight after it has cooled depending on Lamp Power-Up State configuration setting.
2. Burning position is Universal.

Sicherheitshinweise

Es ist äußerst wichtig, ALLE Sicherheitsinformationen und -hinweise in diesem Handbuch und dem beiliegenden Informationsmaterial zu lesen, bevor Sie die hierin beschriebenen Produkte installieren bzw. bedienen. Halten Sie bei der Installation und dem Einsatz dieses Produkts alle Warnhinweise und Vorsichtsmaßnahmen ein.

Folgende Sicherheitssymbole werden in diesem Handbuch verwendet:

VORSICHT - weist auf möglichen Produktschaden hin.

WARNUNG - weist auf mögliche Körperverletzung und Lebensbedrohung hin.

NACHSTEHEND FINDEN SIE ALLGEMEINE HINWEISE ÜBER SICHERHEITSVORKEHRUNGEN GEGEN ELEKTROSCHOCK, FEUER, ÜBERHÖHTE UV-STRAHLUNG UND KÖRPERVERLETZUNGEN.

WARNUNG:
HINWEISE ZUM FEUERSCHUTZ

1. VARI✻LITE®-Scheinwerfer sind ausschließlich für den Einsatz mit bestimmten Lampentyps. Achten Sie auf den Lampentyp (Osram HMI 1200 W/S metal halide lamp), bevor Sie die jeweiligen Lampen ersetzen. Die Installation eines anderen Lampentyps kann gefährlich sein.
2. Scheinwerfer können auf jeder beliebigen Oberfläche montiert werden, solange Sie die Montageanweisungen befolgen. Detaillierte Hinweise finden Sie in diesem Handbuch.
3. Beachten Sie die Einhaltung des erforderlichen Sicherheitsabstandes der VARI✻LITE®-Scheinwerfer von brennbarem Material oder beleuchteten Objekten.

WARNUNG:
HINWEISE ZUM SCHUTZ GEGEN ELEKTROSCHOCK

1. VARI✻LITE®-Scheinwerfer eignen sich ausschließlich für trockene Standorte. Regen oder Feuchtigkeit können die Scheinwerfer beschädigen.
2. Unterbrechen Sie die Stromzufuhr, bevor Sie mit der Arbeit an VARI✻LITE®-Geräten beginnen.
3. Die Geräte sollten nur von qualifiziertem Personal gewartet werden.

WARNUNG:
HINWEISE ZUM SCHUTZ GEGEN ÜBERHÖHTE UV-STRAHLUNG

1. Viele VARI*LITE®-Scheinwerfer verwenden die Lampentyp, der UV-Strahlen abgibt. SCHAUEN SIE NICHT direkt in die Lampe.
2. Es ist gefährlich, Leuchten ohne Linsen oder Blenden zu bedienen. Blenden, Linsen oder Ultraviolettschirme müssen ausgetauscht werden, sofern deren Schutzwirkung durch sichtbare Beschädigung (z. B. Sprünge oder Schrammen) eingeschränkt ist.

WARNUNG:
HINWEISE ZUM SCHUTZ GEGEN KÖRPERVERLETZUNGEN

1. Bei Betrieb sind die Außenflächen der Scheinwerfer heiß. Verwenden Sie bei der Bedienung von aufgeheizter Apparatur die jeweils geeignete Sicherheitsausrüstung (Handschuhe, Augenschutz etc.).
2. Bei Betrieb der Scheinwerfer ist die Lampe heiß. Unterbrechen Sie die Stromzufuhr und lassen Sie die Lampe abkühlen, wenn Sie diese austauschen.
3. Bogenlampen senden ultraviolette Strahlen aus, die Hautverbrennungen und Augenentzündungen verursachen können. Der Betrieb von Bogenlampen erfolgt unter Hochdruck und bei hohen Temperaturen. Sollte die Lampe zerbrechen, besteht die Gefahr von Körperverletzung bzw. von Feuer, das von Lampenteilen ausgelöst werden kann.
4. Tragen Sie beim Austausch der Lampen einen Augenschutz.
5. Die geeignete Sicherheitsausrüstung (Handschuhe, Augenschutz) sollte beim Umgang mit beschädigten Lampen verwendet werden.
6. Wenn die Lampe mit bloßen Händen berührt wird, reinigen Sie sie mit denaturiertem Alkohol und einem flusenfreien Tuch, bevor Sie die Scheinwerfer installieren oder in Betrieb nehmen.
7. Wenn die Lampe beschädigt oder durch Hitzeeinwirkung deformiert ist, muß diese ausgetauscht werden.

WARNUNG:
HF-INTERFERENZ

1. Es handelt sich um ein Produkt der Klasse A. In einer Wohnumgebung kann das Produkt Hochfrequenzstörungen verursachen. In diesem Fall müssen eventuell geeignete Maßnahmen getroffen werden.

BESONDERHEITEN VON BOGENLAMPEN

1. Bogenlampen benötigen eine gewisse Zeitdauer, um nach einem Stromausfall oder einem Spannungsgefälle wieder aufzuleuchten. In einigen Fällen wird die Lampe nach Abkühlung automatisch wieder aufleuchten, je nach der Systemkonfigurationseinstellung des Lampeneinschaltungsstatus.
2. Die Brennposition ist Universal.

Notes de sécurité

Avant de procéder à l'installation des produits décrits dans ce guide et de les mettre en marche, il est extrêmement important de lire TOUS les renseignements et TOUTES les directives de sécurité contenues dans ce guide ainsi que toute documentation jointe. Tenir compte de tous les avertissements et suivre toutes les précautions pendant l'installation et l'utilisation de cet appareil.

Les symboles de sécurité utilisés dans ce guide sont les suivants :

ATTENTION Ce symbole annonce que l'appareil risque d'être endommagé.

AVERTISSEMENT Ce symbole annonce qu'il y a risque d'accident grave ou même fatal.

CETTE SECTION CONTIENT DES INFORMATIONS GÉNÉRALES POUR SE PROTÉGER CONTRE LES DÉCHARGES ÉLECTRIQUES , LES INCENDIES, L'EXPOSITION EXCESSIVE AUX RAYONS UV ET TOUT AUTRE ACCIDENT POUVANT ENTRAÎNER DES BLESSURES.

AVERTISSEMENT:
DIRECTIVES POUR SE PROTÉGER CONTRE LES INCENDIES

1. Les luminaires VARI✻LITE® ont été conçus pour être utilisés uniquement avec certaines type de lampes. Vérifier le type de lampe (Osram HMI 1200 W/S metal halide lamp) avant de remplacer les lampes. L'installation d'un autre type de lampe peut poser un danger.
2. Les luminaires peuvent être fixés sur tout type de surface tant que les directives de montage sont respectées. Voir les explications détaillées dans ce guide.
3. Vérifier la distance à respecter entre les matériaux combustibles ou les objets illuminés et les luminaires VARI✻LITE®.

AVERTISSEMENT:
DIRECTIVES POUR SE PROTÉGER CONTRE LES DÉCHARGES ÉLECTRIQUES

1. Les luminaires VARI✻LITE® sont conçus pour une utilisation au sec uniquement. Une exposition à la pluie et à l'humidité risque d'endommager le luminaire.
2. Débrancher l'appareil avant de procéder à la révision de tout matériel VARI✻LITE®.
3. Les révisions doivent être effectuées uniquement par des personnes qualifiées.

AVERTISSEMENT:
DIRECTIVES POUR SE PROTÉGER CONTRE UNE EXPOSITION EXCESSIVE AUX RAYONS UV

1. Plusieurs luminaires VARI✳LITE® utilisent une lampe qui produit des rayons UV. NE PAS fixer son regard sur la lampe.
2. L'utilisation des luminaires sans lentille ou blindage pose des risques. Tous blindages, lentilles ou écrans ultraviolet visiblement endommagés au point que leur efficacité en est affectée doivent être remplacés, par exemple s'il y a des fissures ou de profondes rayures.

AVERTISSEMENT:
DIRECTIVES POUR SE PROTÉGER CONTRE LES ACCIDENTS POUVANT ENTRAÎNER DES BLESSURES

1. Les surfaces externes du luminaire deviennent brûlantes quand l'appareil est en marche. Pour manœuvrer ou ajuster des appareils brûlants et leurs composants, se protéger suffisamment (gants, protection pour les yeux, etc.).
2. La lampe du luminaire est brûlante lorqu'il est en marche. Débrancher le courant et attendre que la lampe ait refroidi avant de la remplacer.
3. Les lampes à arc émettent des rayons ultraviolets pouvant causer de graves brûlures sur la peau et une inflammation des yeux. De plus, les lampes à arc fonctionnent sous haute tension à de très hautes températures. Si la lampe se casse, les particules de la lampe cassée peuvent causer blessures et/ou incendie en s'éparpillant.
4. Se protéger les yeux pour remplacer la lampe.
5. Utiliser des appareils de protection appropriés (gants, protection des yeux) pour manier des lampes endommagées.
6. Si la lampe a été touchée avec des mains nues, la nettoyer avec de l'alcool dénaturé et l'essuyer avec un chiffon non-pelucheux avant d'installer ou de brancher le luminaire.
7. Si la lampe a été endommagée ou a reçu une déformation thermique, elle doit être remplacée.

AVERTISSEMENT:
INTERFÉRENCE RF

1. Cet appareil est de Classe A. Dans un environnement domestique, cet appareil peut causer des interférences radio, et si c'est le cas, l'utilisateur peut avoir à prendre des mesures adéquates.

CONSIDÉRATIONS DES CARACTÉRISTIQUES DE LAMPES À ARC

1. Après une interruption de courant ou une baisse importante de voltage, les lampes à arc mettent du temps avant de se rallumer. Dans certains cas, la lampe se rallumera automatiquemet après s'être refroidie. Cela dépend de la manière dont le système est réglé pour le statut de mise en marche de la lampe.
2. La position Brûler est Universelle.

Aviso sobre Seguridad

Es muy importante leer TODA la información e instrucciones sobre seguridad que se indica en este manual así como en los documentos adjuntos antes de instalar y operar los productos descritos. Se debe prestar atención a todos los avisos y advertencias durante la instalación y uso de este producto.

Los símbolos de seguridad usados en este manual son los siguientes:

CUIDADO, indica posibles daños al producto.

ADVERTENCIA, indica posibles lesiones o muerte a las personas.

LA INFORMACIÓN GENERAL RELACIONADA A LA PROTECCIÓN CONTRAGOLPES DE CORRIENTE ELÉCTRICA, INCENDIO, EXPOSICIÓN EXCESIVA A RADIACIÓN ULTRA VIOLETA Y LESIONES A LAS PERSONAS SE PUEDE ENCONTRAR SEGUIDAMENTE:

ADVERTENCIA:
INSTRUCCIONES PARA PROTECCIÓN CONTINUA CONTRA INCENDIO

1. Las luminarias VARI✳LITE® han sido diseñadas para ser usadas solamente con algunas lámparas. Tome nota del tipo de lámpara (Osram HMI 1200 W/S metal halide lamp) antes de reemplazarla. Instalación de otro tipo de lámpara puede ser peligroso.
2. Las luminarias se pueden instalar en cualquier tipo de superficie siempre que se sigan las instrucciones de instalación. Vea las instrucciones detalladas en este manual.
3. Tome nota de los requerimientos de distancia de materiales combustibles u objetos iluminados para las luminarias VARI✳LITE®.

ADVERTENCIA:
INSTRUCCIONES PARA PROTECCIÓN CONTINUA CONTRA CHOQUE ELÉCTRICO

1. Las luminarias VARI✳LITE® están diseñadas solamente para lugares secos. La exposición a la lluvia o humedad pueden dañar la luminaria.
2. Desconecte la energía antes de dar servicio a cualquier equipo de VARI✳LITE®.
3. El servicio debe ser realizado solamente por personal calificado.

ADVERTENCIA:
INSTRUCCIONES PARA PROTECCIÓN CONTINUA CONTRA LA EXPOSICIÓN EXCESIVA DE RADIACIÓN ULTRA VIOLETA

1. Muchas luminarias VARI✳LITE® usan un tipo de lámpara que produce radiación UV. NO mire directamente a la lámpara.
2. Es peligroso operar luminarias sin lentes o protectores. Debe cambiar los protectores, lentes o pantallas ultravioletas si se aprecia que han sido dañadas, y que su efectividad pudiera estar deteriorada. Por ejemplo, si tuvieran rajaduras o raspaduras profundas.

ADVERTENCIA:
INSTRUCCIONES PARA PROTECCIÓN CONTRA LESIONES DE PERSONAS

1. Las superficies exteriores de las luminarias están calientes durante su operación. Use un equipo de seguridad apropiado (guantes, protección para los ojos, etc.) cuando haga ajustes en el equipo y componentes que están calientes.
2. Cuando las luminarias están en operación la lámpara estará muy caliente. Desconecte la energía y deje que la lámpara se enfríe antes de reemplazarla.
3. Las lámparas de arco emiten radiaciones ultravioletas que pueden ocasionar serias quemaduras a la piel e inflamación a los ojos. Además, las lámparas de arco operan a alta presión y muy alta temperatura. Si la lámpara se rompe, puede existir el peligro de lesiones al personal o un incendio ocasionado por las partículas de la lámpara rota que se caen.
4. Use protección para los ojos cuando vuelve a colocar una lámpara nueva.
5. Use un equipo de seguridad apropiado (guantes, protección para los ojos, etc.) cuando trabaje con lámparas dañadas.
6. Si toca la lámpara con las manos, limpie la lámpara con alcohol desnaturalizado y con tela sin pelusas antes de instalar o volver a conectar la luminaria.
7. Cambie la lámpara si está dañada o deformada termicamente.

ADVERTENCIA:
INTERFERENCIA RF

1. Este es un producto de Clase A. En el ambiente de la casa este producto puede ocasionar radiointerferencia, en cuyo caso, el usuario debe tomar las medidas adecuadas.

CONSIDERACIONES SOBRE LAS CARACTERÍSTICAS DE LA LÁMPARA DE ARCO

1. Las lámparas de arco requieren un período de tiempo para volver a iluminarse después de una interrupción de energía o de una severa caída de voltaje. En algunos casos, la lámpara se volverá a iluminar en forma automática después que se ha enfriado dependiendo de la configuración del sistema de energía de la lámpara.
2. La posición de encendido es universal.

安全性に関する注意事項

ここに記載されている製品を取り扱う場合は、まず本マニュアルおよび付属のマニュアルの安全性に関する情報と説明をすべてお読みください。また、実際に本製品を取り付けたり使用する際には、すべての注意事項および警告に留意して作業してください。

本マニュアルでは、以下の安全マークを使用しています。

注意：製品に損傷を与える危険性があります。

警告：人身事故につながる危険性があります。

感電、火災、UV 放射に対する過度の露出、および人身事故を防ぐための一般的な情報については、以下の説明をお読みください。

警告：
火災の発生を防ぐためのヒント

1. VARI*LITE® 照明器具は、ランプを使用するように設計されています。ランプを交換する際は、ランプの種類（など）を確認するようにしてください。他の種類のランプを取り付けると危険です。
2. 照明器具は、本マニュアルの指示に従って操作するかぎり、どのようなタイプの表面にでも取り付けることができます。詳細については、本マニュアルを参照してください。
3. ヒューズを交換する場合は、同じヒューズ（同じ種類、同じクラス）を使用してください。
4. VARI*LITE® 照明器具は、可燃性物質または他の光源から必要な距離だけ離して配置してください。

警告：
感電を防ぐためのヒント

1. VARI*LITE® 照明器具は、乾燥した環境で使用するように設計されています。雨で濡れる場所や湿気の多い場所に取り付けると、照明器具が傷むことがあります。
2. VARI*LITE® 照明器具を修理点検する場合は、必ず先に電源を切ってください。
3. 照明器具の修理点検は、資格を持つ技師のみが行うようにしてください。

警告：
過度の UV 放射にさらされないためのヒント

1. VARI*LITE® 照明器具の多くは、UV 放射を生ずる HID タイプのランプを使用しています。ランプを直視することは避けてください。
2. レンズまたはシールドを使わずに照明器具を点灯すると危険です。レンズ、シールド、紫外線画面は、ひび割れや深い引っかき傷などにより、その効力が損なわれるようになったら取り替えるようにします。

警告：
人身事故を防ぐためのヒント

1. 照明器具が点灯しているときは、その外側が熱くなります。熱くなった器具やコンポーネントを取り扱う際には、適切な防具（手袋や保護用眼鏡）を使用してください。
2. 照明器具が点灯しているときは、そのランプが熱くなります。ランプを交換する場合は、照明器具の電源を切り、ランプの温度が下がるまで待ってください。ランプの裏ぶたをあけると、遮断スイッチが働いて、ランプの電源が切れる場合があります。
3. アーク灯は紫外線を放射します。この紫外線によって、ひどい火傷を負ったり、目の炎症を起こすことがあります。さらに、アーク灯は、高圧高温の状態で光を発します。そのため、万一アーク灯が破損すると、飛び散った破片で人身事故や火災が発生する危険性があります。
4. 再点灯するときには、保護用眼鏡を着用してください。
5. 損傷したランプを取り扱う場合は、適切な防具（手袋や保護用眼鏡）を着用してください。
6. 手袋を着用せずに直接手でランプを触った場合は、変性アルコールを使ってランプをきれいにし、糸くずの出ない布で拭いてから照明器具を取り付け、電源を入れるようにします。
7. 傷がついたランプや熱によって変形したランプは取り替えてください。

警告：
RF 干渉

1. 本製品は Class A に分類されます。本製品は、家庭環境において無線干渉を起こす可能性があります。その場合、使用者は適切な処置を取らなければならないことがあります。

アーク灯の特性

1. 停電後または大きな電圧ディップ後にアーク灯を再点灯する場合は、しばらく時間をおくようにしてください。Lamp Power-Up State）シ
   ステム設定によっては、温度が下がったときに自動的に再点灯される場合もあります。
2. アーク灯は点光源です。

Table of Contents

Introduction

About This Manual 1
Additional Documentation 1
Text Conventions 2
Customer Service 2

Chapter 1. Description

Features
Standard Features 4
Specific Features 4
Components
Included Items 5
Replacement Items/Accessories 5
Luminaire Overview 6

Chapter 2. Installation

Power and Data Cabling Requirements
Power 8
Data Cables 9
Recommended Cable Types/Manufacturers 10
DMX Termination Connector 10
Installation Procedures
Hanging the Luminaire 11
Floor Mounting the Luminaire 14
Connecting Data and Power 14
Powering Up
Power Up and Configuration Procedure 15
Addressing
Program Starting Address 16
Program Starting Address Without Calibrating Luminaire 16

Chapter 3. Operation

DMX Operation
Channel Mapping 18
Control Channel Functions 19
DMX Mapping
Dimmer Wheel 21
Color Control 21
Color Mixing 21
Fixed Color Wheel 22
Beam Control 24

Strobe 24
Gobo/Effects Control 25
Gobo Wheel 1 (Rotating) and 2 (Fixed) 25
Index/Rotation 26
Shutter Control 28
Shutter Mechanism 28
Luminaire Timing
Timing Channel Information 29
Updating Software
Reprogramming Luminaires 38
Components Overview 38
Reprogramming Procedure 39
Transferring Software From Luminaire to Luminaire 41

Chapter 4. Menu System

Menu Operation
What Is the Menu System? 46
Controls Operation 46
Default State 47
Shortcuts 47
Menu Functions
Menu System Overview 48
Menu System Function Chart 49
Menu Function Definitions 52
Self-Tests
Running Parameter Tests 54

Appendix E. Troubleshooting and Maintenance

Troubleshooting
Error Messages 58
Troubleshooting Guide 59
Routine Maintenance
Lamp Replacement 60
Align Lamp 61
Gobo Replacement - Gobo Wheels 1 and 2 62
Color Filter Replacement 64
Cleaning Front Lens 65

Appendix F. Technical Specifications

VL3500 Spot Luminaire 67
VL3000 RMA Form 69

Introduction

About This Manual

This manual provides necessary information regarding safety, installation, operation and routine maintenance for the VARI✻LITE® VL3500™ Luminaires. Familiarizing yourself with this information will help you to get the most out of your luminaire.

WARNING: It is important to read ALL accompanying safety and installation instructions to avoid damage to the product and potential injury to yourself or others.

This manual covers the following models:

Model	Part Number	Source
VL3500 Spot Luminaire	20.9678.0019	Arc
VL3500Q Spot Luminaire	20.9678.0020	Arc

Additional Documentation

A service manual for extended maintenance of the VL3500 series luminaires is available in both printed and electronic (PDF) formats:

- VL3500 Series Luminaire Service Manual (02.9678.0018)
  - Testing, Troubleshooting, Component Replacement and Illustrated Parts Breakdown.

Note: Performing maintenance procedures may void the product warranty. Refer to the Vari-Lite Limited Warranty card included in the product shipping package for more information.

For more information regarding DMX512 systems, refer to the following document available from United States Institute for Theatre Technology, Inc. (USITT):

- Digital Data Transmission Standard for Dimmers & Controllers plus AMX 192 Analog Multiplex Data Transmission Standard for Dimmers & Controllers. (A copy of Recommended Practice for DMX512 is included.)

  USITT Inc.
  6443 Ridings Road
  Syracuse, NY 13206-1111 USA
  Tel: (800) 938-7488
  Fax: (866) 398-7488
  www.usitt.org

Text Conventions

The following styles and meanings are used throughout this manual:

Style	Meaning
[Button]	Front panel button. Example: Press [Menu].
[Up] / [Down] arrows	Press either [Up] or [Down] arrow button at Menu Display.
MENU	LCD Menu Display read-out. Example: Press [Up] / [Down] arrows until LAMP appears.

Customer Service

Our Goal

At Vari-Lite, we are committed to providing you the highest quality in customer service. Our comprehensive resources are available to help your business succeed and ensure you get the full benefit of being a Vari-Lite customer. Whether your needs are telephone troubleshooting assistance, product training or technical service, our full-time staff of experienced professionals is on-hand to provide support.

How to Reach Us

For assistance in your area, call the dealer from which your product was purchased.

or

Contact an Authorized Service Center.

or

Contact the Vari-Lite Customer Service Department, 9am -6pm CST Monday through Friday, at the following:

phone: 1-877-VARI-LITE (1-877-827-4548)
email: customerservice@genlyte.com

Additional Resources

For additional resources and documentation, please visit our website at www.vari-lite.com and follow the Support link.

CHAPTER 1.

Description

This chapter contains descriptions of luminaire features and components, along with a list of accessories which are available.

- **Features**
- **Components**

Features

Standard Features

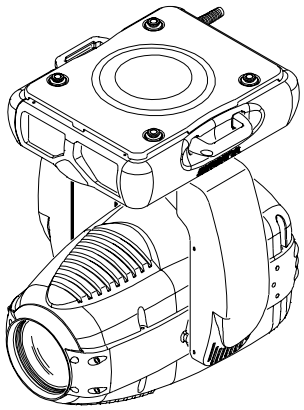

All VL3000 series luminaires have the following standard features:

- CYM color mixing system.
- Variable CTO color correction.
- Full field dimming system.
- Dual blade strobe system.
- Repositional pan/tilt system.
- Control by DMX512 protocol.
- Fan cooled.
- UV/IR glass.
- 1200W lamp source.

Specific Features

VL3500 Spot and VL3500Q Luminaires

- Shutter assembly with four blades: +/- 50° system rotation and +/- 30° blade rotation.
- 6:1 zoom optics system with 10° to 60° range.
- Variable beam focus to morph between gobo wheels.
- One rotating gobo wheel with five rotatable, indexable gobo positions and one open position.
- One Fixed gobo wheel with six positions and one open position.
- 50 percent audible reduction in noise output from the original Series 3000™ luminaires *(VL3500Q only)*.
- High performance UV / IR glass *(VL3500Q only)*.

Components

Included Items

The following illustration shows all items included with the luminaire:

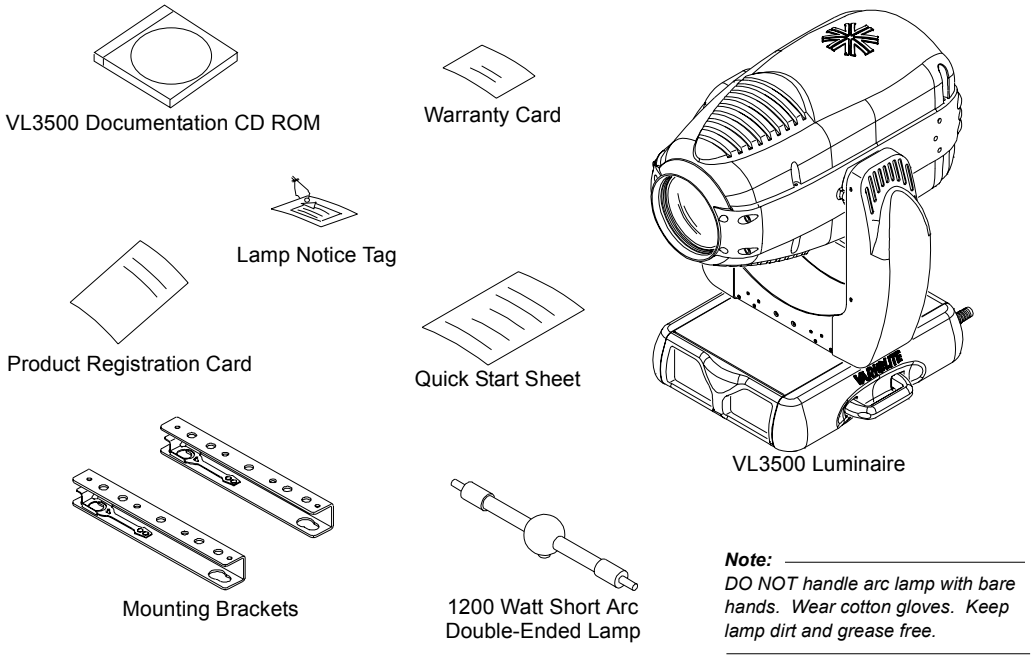

Figure 1-1: VL3500 Luminaire Packing List

Replacement Items/Accessories

The following optional and/or replacement items can be ordered directly from Vari-Lite. (Please order by Vari-Lite part number.)

Vari-Lite Part Number	Accessory
22.9620.0194	Safety Cable Assembly
25.9661.0057	DMX Termination Connector Assembly
55.6840.0001	Truss Hook, Mega-Clamp, Round and Square
55.6841.0001	Truss Hook, Mega-Claw for 2” Round Tube
71.2557.1200	Osram HMI 1200 W/S Lamp

Luminaire Overview

The following illustration shows the external luminaire components and controls.

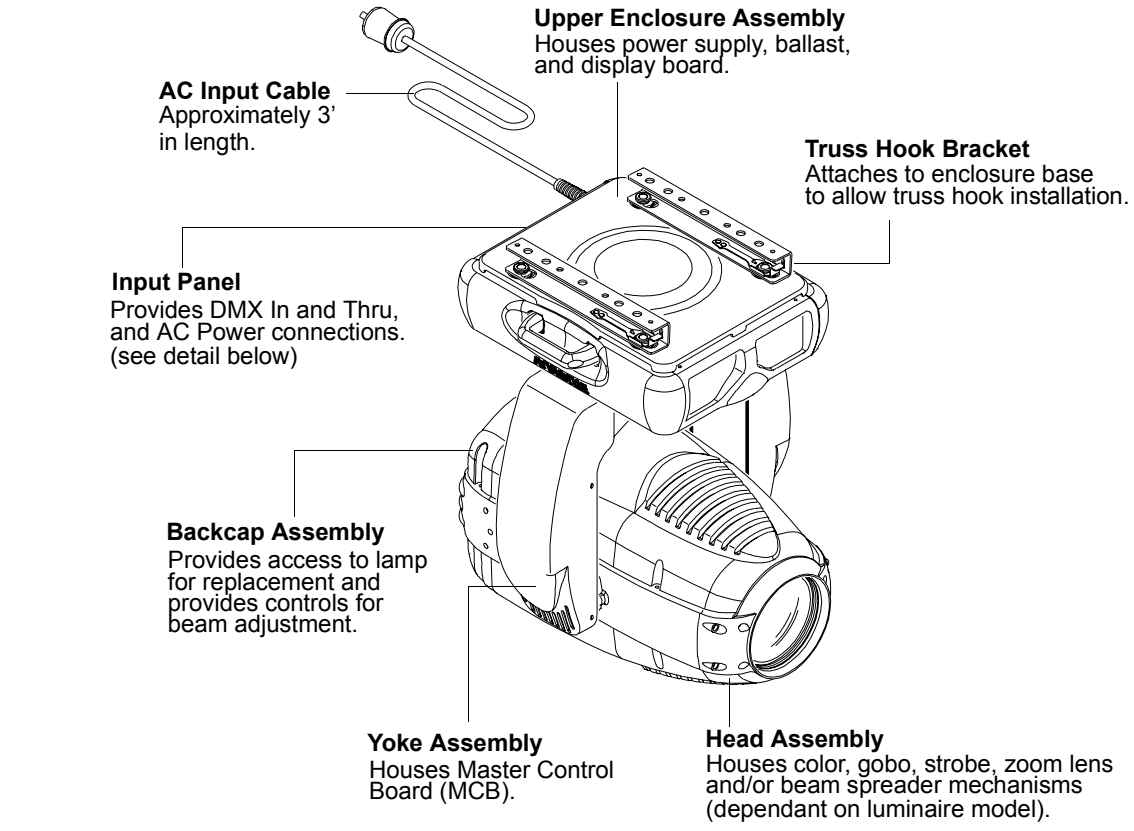

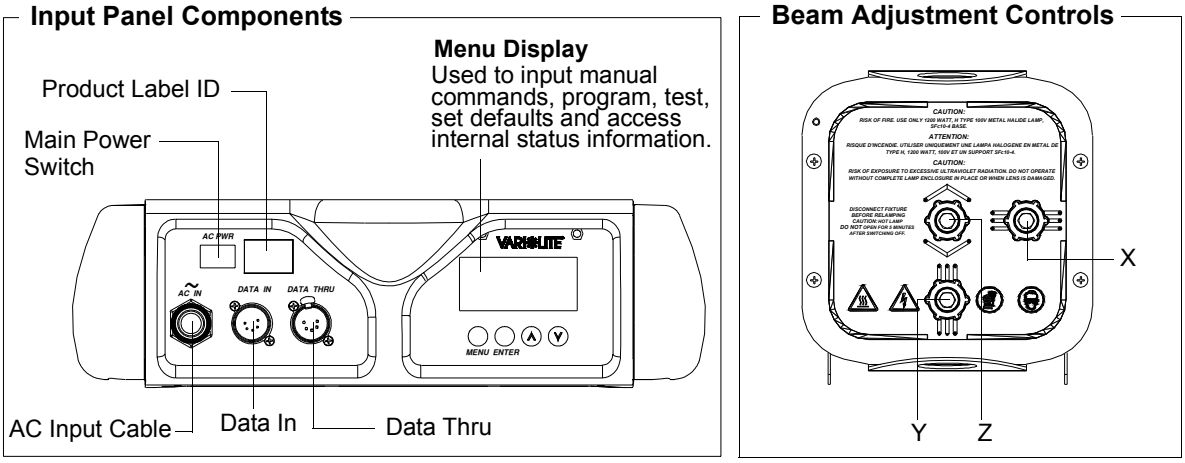

Figure 1-2: VL3500 External Components and Controls

CHAPTER 2.

Installation

This chapter contains instructions for installation of the luminaire. It includes connecting power and data, along with instructions for powering up the luminaire for the first time and addressing it within your system.

- **Power and Data Cabling Requirements**
- **Installation Procedures**
- **Powering Up**
- **Addressing**

Power and Data Cabling Requirements

Power

The luminaire requires standard AC power distribution from 200-240 VAC, 50/60 Hz. Ten amps will be required.

Depending on the application, the luminaire's AC input cable may require a different connector. If required, install a new connector meeting your requirements using the following wire color code:

Wire*	Connection
Green/Yellow	AC Ground
Blue	AC Neutral
Brown	AC Line

* International (Harmonized) Standard

WARNING: DO NOT connect to three-phase Delta service in countries with 240 volt power.

Note: The lamp will not strike below 180 volts RMS.

For single-phase power at 200-240 volts RMS:

Connection	Pin
AC Neutral	X
AC Line	Y
Ground (Earth)	G

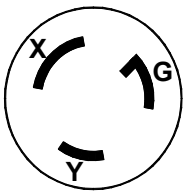

For three-phase power at 208 volts RMS:

Connection	Pin
Phase 1	X
Phase 2	Y
Ground (Earth)	G

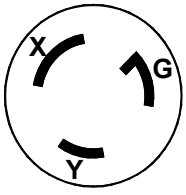

Data Cables

The VL3500 series luminaire is equipped with two, 5-pin XLR connectors for DATA IN and DATA THRU (out) applications. DATA IN requires a 5-pin, female XLR connector and DATA THRU requires a 5-pin, male XLR connector. When purchasing or constructing data cables, it is important that not only the correct cable type be used, but also quality cable to ensure a reliable DMX512 system. Your cabling should meet the following USITT DMX specification requirements:

- Suitable for use with EIA485 (RS485) operation at 250k baud.
- Characteristic impedance 85-150 ohms, nominally 120 ohms.
- Low capacitance.
- Two twisted pairs.
- Foil and braid shielded.
- 24 AWG minimum gauge for runs up to 1000 feet (300m).
- 22 AWG minimum gauge for runs up to 1640 feet (500m).

Note: Microphone type cables and other general purpose, two-core audio or signal cables are not suitable for use with DMX512.

The XLR 5-pin connectors should be wired as follows:

Pin/Wire Code to XLR Connectors						
Data Thru Cable Pinout 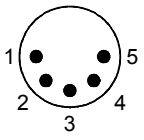 Male Conn	**Pin 1** Foil & Braided Shield	**Pin 2** 1st conductor of 1st twisted pair Data (-)	**Pin 3** 2nd conductor of 1st twisted pair Data (+)	**Pin 4** 1st conductor of 2nd twisted pair Data (-)	**Pin 5** 2nd conductor of 2nd twisted pair Data (+)	Data In Cable Pinout 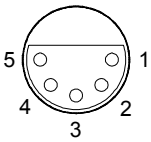 Female Conn

Note: Refer to the USITT Recommended Practice for DMX512 guide for additional information regarding DMX512 systems. How to obtain a copy is detailed in "Additional Documentation" on page 1.

Recommended Cable Types/Manufacturers

These are only a few of the suitable cable types. Any quality EIA485, twisted pair, 120 ohm, shielded cable will also work.

Table 2-1: Recommended Cable Types

Type	Pairs	ZΩ*	Jacket	AWG	Use	Temp (F)
Belden Cables						
1215A	2	150	PVC	26	IBM Type 6 Office cable	75
1269A	2	100	PTFE	22 (Solid)	High Temp, Plenum cable	200
8102	2	100	PVC	24	UL2919	80
8132	2	120	PVC	28	UL2919	80
8162	2	100	PVC	24	UL2493	60
82729	2	100	PTFE	24	High Temp, Plenum cable	200
88102	2	100	PTFE	24	High Temp, Plenum cable	200
89696	2	100	PTFE	22	High Temp, Plenum cable	200
89729	2	100	PTFE	24	High Temp, Plenum cable	200
89855	2	100	PTFE	22	High Temp, Plenum cable	200
9729	2	100	PVC	24	UL2493	60
9804	2	100	PVC	28	UL2960	60
9829	2	100	PVC	24	UL2919	80
9842	2	120	PVC	24	UL2919	80
Proplex Cables						
PC224P	2	110	Polyure-thane	22	Heavy Duty and Portable	105
PC224T	2	110	PVC	22	UL2464	105
PC226T	3	110	PVC	22	UL2464	

* Characteristic Impedance

DMX Termination Connector

A DMX termination connector is required at the last luminaire (or "far end of the line") to prevent signal reflections. Signal reflections may cancel out the signal at certain line lengths, resulting in errors. The terminator is also necessary for software downloads and running tests on multiple luminaires. To construct your own connector, you will need the following components:

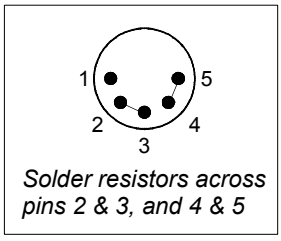

Solder resistors across pins 2 & 3, and 4 & 5

- 5-pin, male XLR connector.
- Two 1/4W 5% 120 ohm resistors.

Note: A DMX termination connector assembly is available as an accessory from Vari-Lite. See "Replacement Items/Accessories" on page 5.

Installation Procedures

Hanging the Luminaire

The VL3500 series luminaire can be hung horizontally or vertically from any structure designed to work with the type of load created by this moving luminaire. Two mounting bracket assemblies (provided) are used to attach truss hooks or other mounting hardware as required. Many compatible truss hooks are available from different manufacturers for your particular needs.

A minimum of one hook per truss hook bracket is required. If mounting method does not use truss hooks, two attachment points per truss hook bracket are required. When attaching more than one point on a single bracket, the attach points must be spaced as far apart as possible using the supplied mounting holes.

Install mounting hardware and brackets:

Step 1. Install truss hooks on two provided truss hook brackets as required.

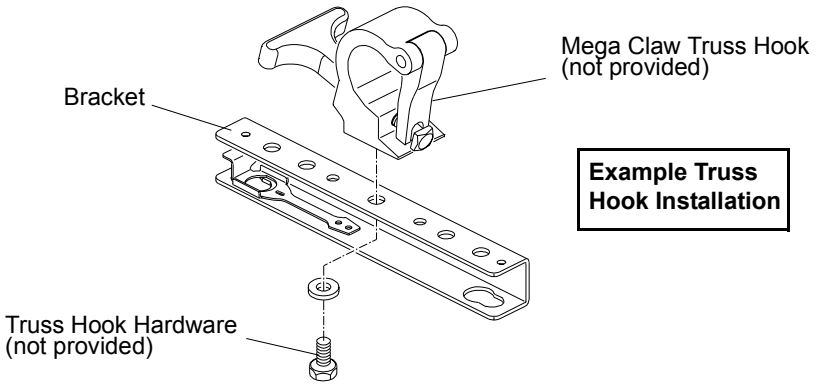

Figure 2-1: Installing Truss Hooks

Note: Various types of truss hooks can be used. The Mega Claw truss hook (as shown in the example above) as well as many other standard hooks, can be ordered separately.

Step 2. Determine required configuration of bracket installation. Brackets may be installed in either orientation as shown.

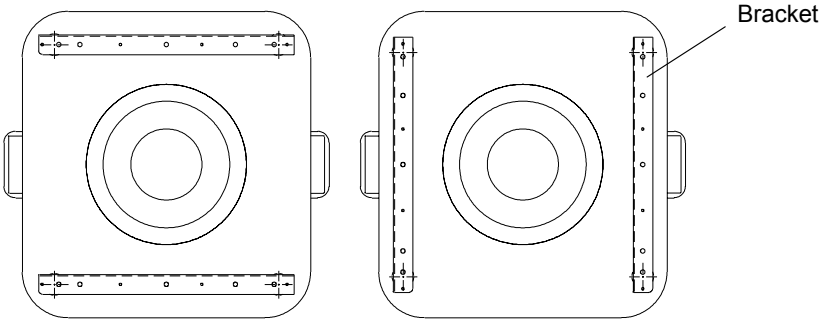

Figure 2-2: Bracket Orientation Options

Step 3. While pulling up on locking mechanism release, fit keyed holes onto raised mounting buttons at bottom of enclosure. Slide forward and release locking mechanism to lock in place. Ensure brackets are locked securely. (Always face brackets in same direction as shown.)

WARNING: Ensure that the bracket locking mechanism is fully seated after the bracket is installed on the luminaire.

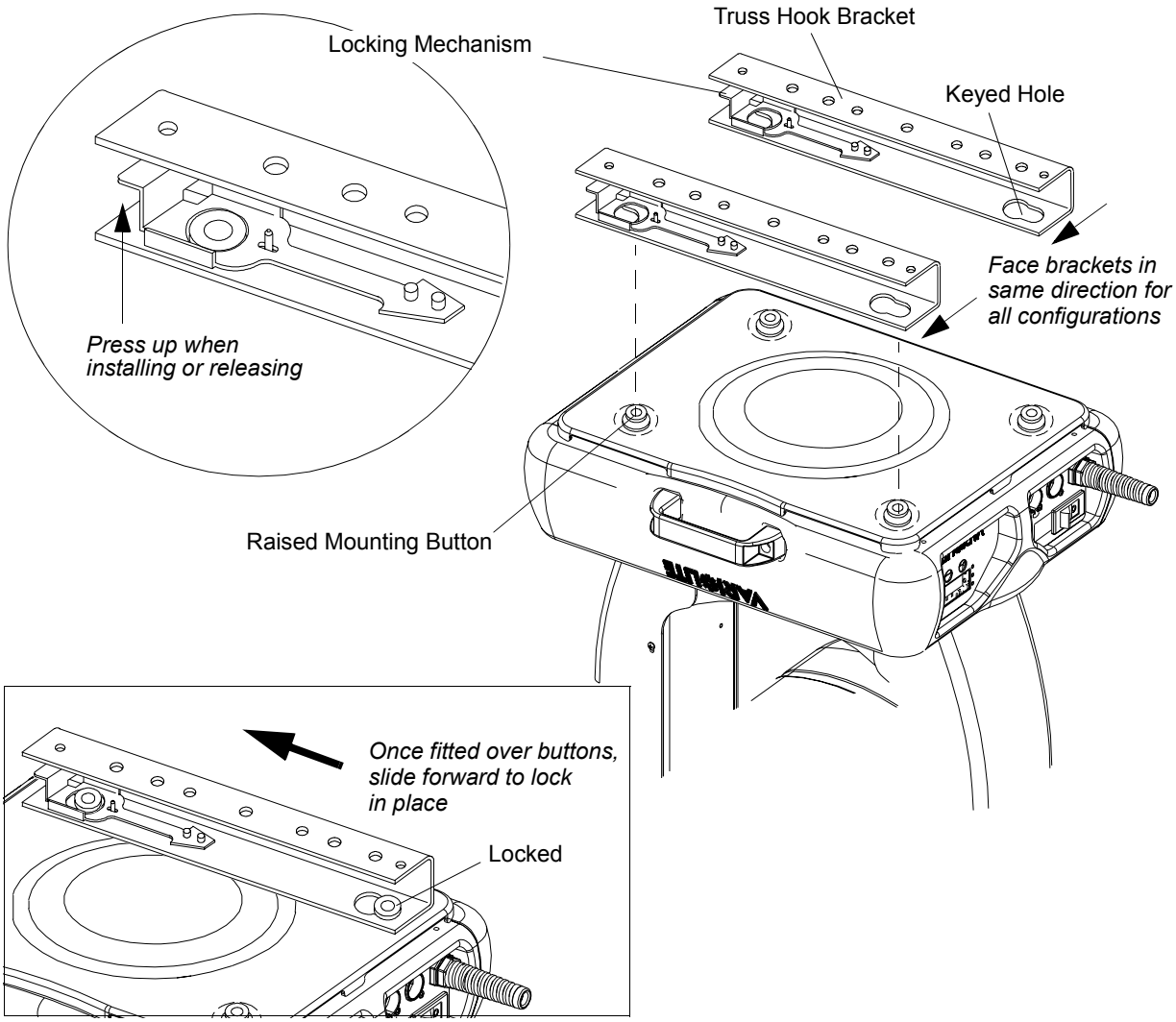

Figure 2-3: Installing Brackets on Luminaire Enclosure

Installing in Truss:

Step 1. Using two people, lift luminaire into mounting position.

Step 2. Secure in place with truss hook. Ensure truss hook hardware that locks hook in place (e.g. wing bolt) is properly tightened and that luminaire is fully supported.

Step 3. Attach safety cable (as required) as follows:

a. Connect one end of cable to luminaire handle.

b. Loop at least once around truss/pipe and attach other end of cable to other handle.

Step 4. Connect power and data cables according to procedure given in "Connecting Data and Power" on page 14.

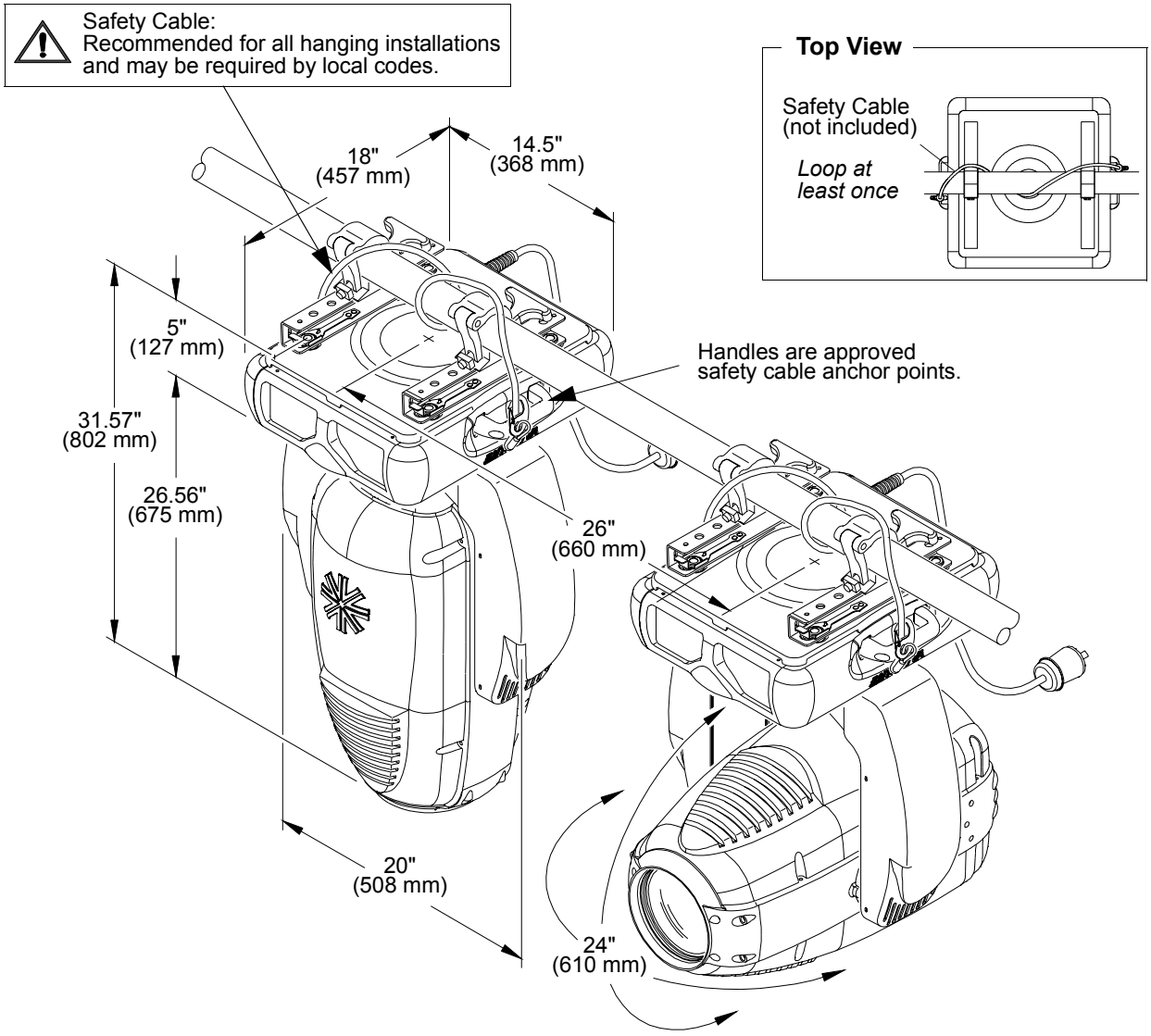

Figure 2-4: Hanging Configuration and Dimensions

Floor Mounting the Luminaire

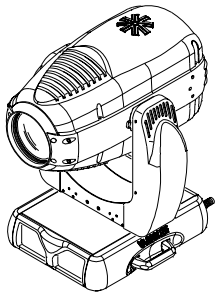

The luminaire enclosure is sufficient to stabilize the luminaire in a floor installation, provided that the mounting surface is flat and sturdy.

Connecting Data and Power

A maximum of 32 luminaires may be connected in any one DMX data link.

Note: This maximum limit applies to the luminaire "daisy chain" only. Your system or console may require fewer luminaires on a single data link path. Consult your console documentation for more information.

To connect power and data:

Step 1. Connect data cable from console to first luminaire in chain at DATA IN connector.

Step 2. If required, connect additional data cables from DATA THRU connectors to DATA IN connectors of remaining luminaires in link.

Step 3. At last luminaire in link, install a DMX termination connector at DATA THRU connector. (Luminaires and other devices on the same DMX chain may not function properly without termination.)

Step 4. Connect AC input cable connector to power input source.

Step 5. Dress AC input and data cables and secure them so that they will not interfere with luminaire head and yoke movement.

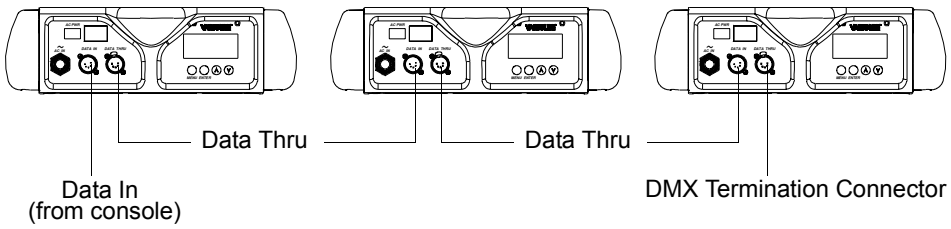

Figure 2-5: Connecting Power and Data

Powering Up

Power Up and Configuration Procedure

Since Lamp On is the default state, the lamp will strike when the luminaire is powered up for the first time. When AC power is applied and the luminaire's power switch is in the "On" position, the luminaire will immediately begin a calibration sequence that steps it through pan and tilt movements. The internal color, gobo, and beam mechanisms will also move through a full range of motion. After calibration, the luminaire head will either stop at its "home" position (which positions the pan axis at mid-rotation and the head parallel to the yoke with the lens pointing away from the luminaire upper enclosure) or move to its current DMX-defined position if DMX data is present. All internal mechanisms also move to their "home" or DMX-defined positions.

Subsequently, depending on the luminaire's setting for Lamp Power-Up State (refer to "Menu System Function Chart" on page 49), when power is applied, the arc lamp will either **a)** "strike" or ignite - Lamp On (*default)*, **b)** await calibration completion and then strike - Cal On, or **c)** await manual command to strike - Lamp Off.

CAUTION: Before applying power, be sure the luminaire is hung or positioned so that the head and yoke can move freely without restriction.

To power up:

- At each luminaire, apply power by switching power switch to "I" (ON) position. Luminaire will automatically step through following procedure:
    a. If Lamp Power-Up State is set to Lamp On, lamp will strike (ignite).
    b. Luminaire will cycle through calibration and stop at "home" position.
    c. If Lamp Power-Up State is set to Cal On, lamp will strike (ignite) at end of calibration sequence.

Addressing

Program Starting Address

The address setting for DMX console controlled systems is entered using the Menu Display (refer to "Menu Operation" on page 46). The luminaire retains the DMX address even if power is removed.

Note: Refer to your console operating instructions for specific information regarding its addressing requirements.

Program a DMX starting address:

Step 1. Press [Menu].

Step 2. Press [Up] / [Down] arrows until Address appears. Press [Enter].

Step 3. Press [Up] / [Down] arrows to enter starting address.

Step 4. Press [Enter] to set.

Program Starting Address Without Calibrating Luminaire

It is possible to bypass the calibration sequence and go directly to the Menu Display programming in order to pre-program an address setting.

Program starting address without calibrating luminaire:

- While powering up luminaire, press and hold [Menu]. Program address as in Program Starting Address above.
- Press and hold [Menu] until display changes from "Starting" to the DMX address.

Note: The luminaire will require a reset to restore control.

CHAPTER 3.

Operation

This chapter contains instructions for operating the luminaire using DMX control and for updating the internal software.

- **DMX Operation**
- **DMX Mapping**
- **Luminaire Timing**
- **Updating Software**

DMX Operation

Channel Mapping

These tables assume a DMX start address of 1. When a different starting address is used, this address becomes channel 1 function and other functions follow in sequence. (There is only one DMX mode for this luminaire, which is Enhanced 16-bit Mode.)

Table 3-1: VL3500 Spot Luminaires Enhanced 16-Bit Mode

DMX Channel	Parameter	Range
1	Intensity	0 - 255
2	Hi Byte Pan	0 - 65535
3	Lo Byte Pan	
4	Hi Byte Tilt	0 - 65535
5	Lo Byte Tilt	
6	Edge	0 - 255
7	Zoom	0 (small) - 255 (big)
8	CTO Mixer	0 (open) - 255 (full saturation)
9	Cyan Mixer	0 (open) - 255 (full saturation)
10	Yellow Mixer	0 (open) - 255 (full saturation)
11	Magenta Mixer	0 (open) - 255 (full saturation)
12	Color Wheel	0 - 216 / 217 - 255 (spins)
13	Rotating Gobo Wheel (Gobo 1)	0 - 108 (index) / 109 - 216 (rotating) / 217 - 255(spins)
14	Hi Byte Gobo 1 Index/Rot	0 - 65535
15	Lo Byte Gobo 1 Index/Rot	
16	Fixed Gobo Wheel (Gobo 2)	0 - 216 (index) / 217 - 255 (spins)
17	Strobe	0 (open) - 255 (max)
18	Shutter 1a	0 (open) - 255 (closed)
19	Shutter 1b	1 (open) - 255 (closed)
20	Shutter 2a	2 (open) - 255 (closed)
21	Shutter 2b	3 (open) - 255 (closed)
22	Shutter 3a	4 (open) - 255 (closed)
23	Shutter 3b	5 (open) - 255 (closed)
24	Shutter 4a	6 (open) - 255 (closed)
25	Shutter 4b	7 (open) - 255 (closed)
26	Rotation	0 - 255 (128 - center)
27	Focus Time	0 - 255
28	Color Time	0 - 255
29	Beam Time	0 - 255
30	Gobo Time	0 - 255
31	Control Channel *(see next page)*	0 - 255

Control Channel Functions

Control channel functions allow special actions such as reset, lamp on/off and partial recalibration. These must be executed with zero time transition or with timing disabled. Discrete values must be used; not manual controls such as faders or encoders (see chart below for values).

Reset - resets all luminaire mechanisms.

Lamp On or Lamp Off - switches lamp on or off.

Partial Recalibration - resets only the target mechanism (color, gobo, zoom, etc.) without affecting others.

Pan/Tilt Fast Mode- reduces the reaction time to pan and tilt movement commands in the luminaire.

Pan/Tilt Normal Mode - processes luminaire pan and tilt commands at normal rate.

Note: When utilizing the control channel functionality for the Pan/Tilt Fast and Pan/Tilt Normal Mode functions, the mode setting will change immediately following the input of DMX 40-45 (Pan/Tilt Fast Mode) and DMX 50-55 (Pan/Tilt Normal Mode). No other values or actions within the control channel will change the Mode setting. The action of the Mode is based on the last command executed. Mode will not change until another DMX value of 40-45 or 50-55 is entered into the control channel. Resetting the luminaire or cycling the power will not affect the Mode setting. The control channel value will remain visible in all the cues unless another value is inputted. We recommend that the control channel number not be changed to 0, so that the current Mode setting can be viewed in the cue data without having to know the last value entered. This will prevent inconsistencies when changing or substituting other luminaires that may have a different Mode setting.

Table 3-2: Control Channel Functions

Control Channel Function	Control Channel Value		
	% Value	DMX Value	
		For 3 Secs or Greater	After 3 Secs
Pan/Tilt Fast	16-18	40-45	N/A
Pan/Tilt Normal	20-22	50-55	N/A
Luminaire Reset	32-33	81-87	0
Lamp Off	65-67	165-171	0
Lamp On	98-100	249-255	0
Partial Recalibration of:			
- Color	40	100-104	0
- Gobos	45	112-116	0
- Edge/Zoom/Shutter	50	126-130	0
- Dimmer/Strobe	55	138-142	0

To use control channel functions:

Step 1. Select an action to be sent*.

Step 2. Set control channel value for desired action (for example, 84 for reset). Hold value for 3 seconds.

Step 3. Set control channel value to zero. (This must occur without any scaling values. Action will be voided if other values are detected between action value and zero.)

Note: A numerical keypad is required for sending values. An encoder or fader does not allow for a quick value change, which is required to effect the control functions.

---

* = Only this step is required for Pan/Tilt mode.

DMX Mapping

Dimmer Wheel

The luminaire is equipped with a graduated glass dimmer wheel. The dimmer wheel allows for smooth timed fades from full light output to absolute black.

Color Control

The luminaire's color system is composed of a color mixing mechanism and a fixed color wheel. The follow sections describe these components.

Color Mixing

The color mixing mechanism is made up of four graduated color disks: cyan, yellow, magenta and CTO (color temperature orange). These disks provide full-spectrum color crossfades from pastel to saturated color.

Table 3-3: DMX Map for Blue, Amber, Magenta and CTO Colors

% Value	DMX Value	Action
0	0	Open
100	255	Full Saturation

Fixed Color Wheel

The fixed color wheel offers fast or timed changes, partial and full frame positions, and various spin rates in either direction. The wheel contains seven positions, one being open. The following illustration shows the standard positions and color configuration:

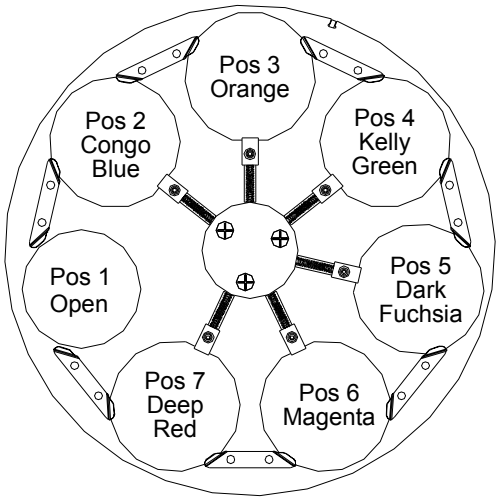

Figure 3-1: Fixed Color Wheel Positions

Table 3-4: Color Wheel Standard Configuration Chart

Position	Color Filter	Part Number
1	OPEN	N/A
2	Congo Blue	41.9678.0305.03
3	Orange	41.9678.0305.05
4	Kelly Green	41.9678.0305.02
5	Dark Fuchsia	41.9678.0305.06
6	Magenta	41.9678.0305.04
7	Deep Red	41.9678.0305.01

Table 3-5: DMX Map for Fixed Color Wheel

Position	DMX Value	Action
1	0	Open
1.5	15	Half
2	31	Center
2.5	48	Half
3	62	Center
3.5	77	Half
4	93	Center

Table 3-5: DMX Map for Fixed Color Wheel

Position	DMX Value	Action
4.5	109	Half
5	124	Center
5.5	140	Half
6	155	Center
6.5	171	Half
7	186	Center
7.5	201	Half

Table 3-6: DMX Map for Fixed Color Wheel Spin

%	DMX Value	Wheel Spin / Direction
85 - 91	217 - 233	Fast to Slow / CCW
92	234 - 236	Stop
93 - 100	237 - 255	Slow to Fast / CW

Beam Control

Strobe

A dual blade strobe and dousing system provide variable strobe effects capable of slow, medium, fast, random, and plus a synchronized variable rate (up to 14 Hz.) operation. The strobe blades can be used to augment fades or rapid dousing (blocking of the beam) of the luminaire.

Table 3-7: DMX Map for Strobe

% Value	DMX Value	Action
0	0-2	Open
1	3-5	Closed
2	6-7	Slow Random
3	8-10	Med Random
4	11-12	Fast Random
5-100	13-255	Speed Range

Gobo/Effects Control

Gobo Wheel 1 (Rotating) and 2 (Fixed)

Gobo Wheel 1 has six positions, one being open. The gobo wheel assembly can spin and individual gobos can rotate. Gobo Wheel 2 is fixed with seven positions with one being open. Fixed means only the gobo wheel will spin. The following illustration shows the two wheels' standard gobo configurations:

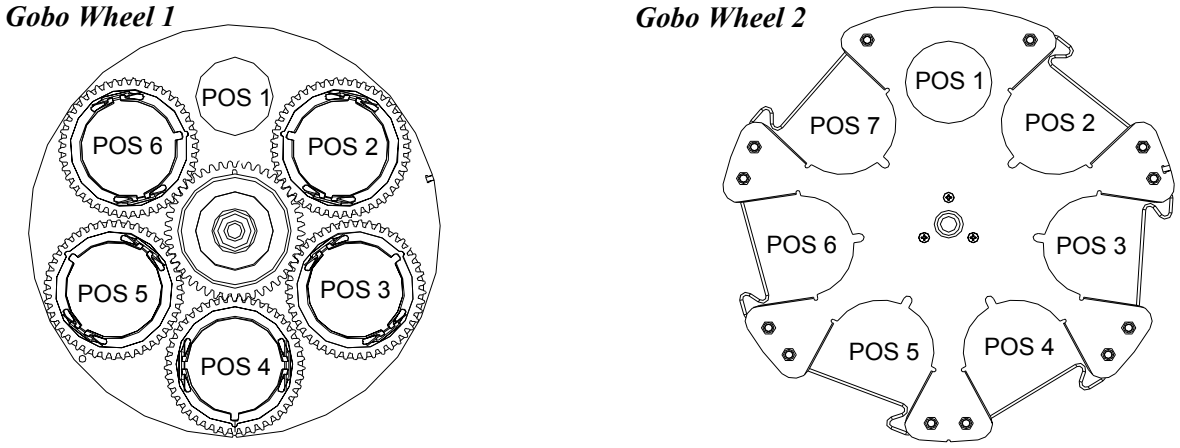

Figure 3-2: Gobo Wheels 1 and 2

Table 3-8: Rotating Gobo Wheel 1 Standard Configuration Chart

Position	Gobo Style	Part Number
1	open	n/a
2	Alpha Rays	41.6030.7029
3	Night Sky	41.6030.5011
4	Tribal Break-up	41.6030.5523
5	Color Gobo	41.6030.9999
6	Glacier Gag	41.6030.8503

Table 3-9: Fixed Gobo Wheel 2 Standard Configuration Chart

Position	Gobo Style	Part Number
1	open	n/a
2	Palm Leaves	41.6030.5503
3	Shock Break-up	41.6030.7018
4	Triangle Break-up	41.6030.7014
5	Ice Blocks	41.6030.8509
6	Pebbles	41.6030.7002
7	Circle of Ovals	41.6030.6011

Index/Rotation

The rotating gobo wheel operates in two modes: INDEX Mode and ROTATE Mode. The corresponding values are given in the DMX Map Tables below. Gobos will also behave as follows:

- Gobo wheels will only stop at whole images.
- It is not necessary for the wheel to complete a full revolution to change a gobo from indexing mode to rotating mode.
- Timed moves are only available using the Gobo Time channel (30).
- Spins are variable from DMX 217-236 for CCW fast to slow, and 237-255 for CW slow to fast.

Table 3-10: DMX Map for Gobo Wheel 1

Position	Indexing	Rotating	Function
1	0-7	100-116	Open
2	8-25	117-134	Gobo 1
3	26-44	135-153	Gobo 2
4	45-63	154-172	Gobo 3
5	64-82	173-191	Gobo 4
6	83-99	192-209	Gobo 5

Table 3-11: DMX Map For Gobo Wheel 1 Spin

%	DMX Value	Wheel Spin / Direction
85-91	217-233	Fast to Slow / CCW
92	234-236	Stop
93-100	237-255	Slow to Fast / CW

Table 3-12: DMX Map for Gobo Wheel 2

%	DMX Value	Position	Function
0-5	0-13	1	Open
6-17	14-43	2	Gobo 1
18-29	44-75	3	Gobo 2
30-42	76-108	4	Gobo 3
43-55	109-140	5	Gobo 4
56-67	141-172	6	Gobo 5
68-79	173-202	7	Gobo 6

Table 3-13: DMX Map for Wheel 2 Spin

%	DMX Value	Wheel Spin / Direction
85-91	217-233	Fast to Slow / CCW
92	234-236	Stop
93-100	237-255	Slow to Fast / CW

The Gobo Index function utilizes 16-bit control which offers enhanced resolution whether in INDEX or ROTATE mode.

Table 3-14: Index Rotation Range

Function	Range
Index	0-65535
Rotate	0 (cw max) - 32599 (cw min) 32600 - 33047 (stop) 33048 - 65535 (ccw max)

Shutter Control

Shutter Mechanism

The shutter mechanism is comprised of four frame blades that move independently or in unison on two planes for a crisp, sharp image (refer to Figure 3-3 below). The entire assembly operates in a smooth, time-continuous motion using stepper motors (two per frame blade and one to rotate the entire shutter mechanism). The shutter mechanism can rotate 50º in either direction and the frame blades can tilt +/- 30º.

.

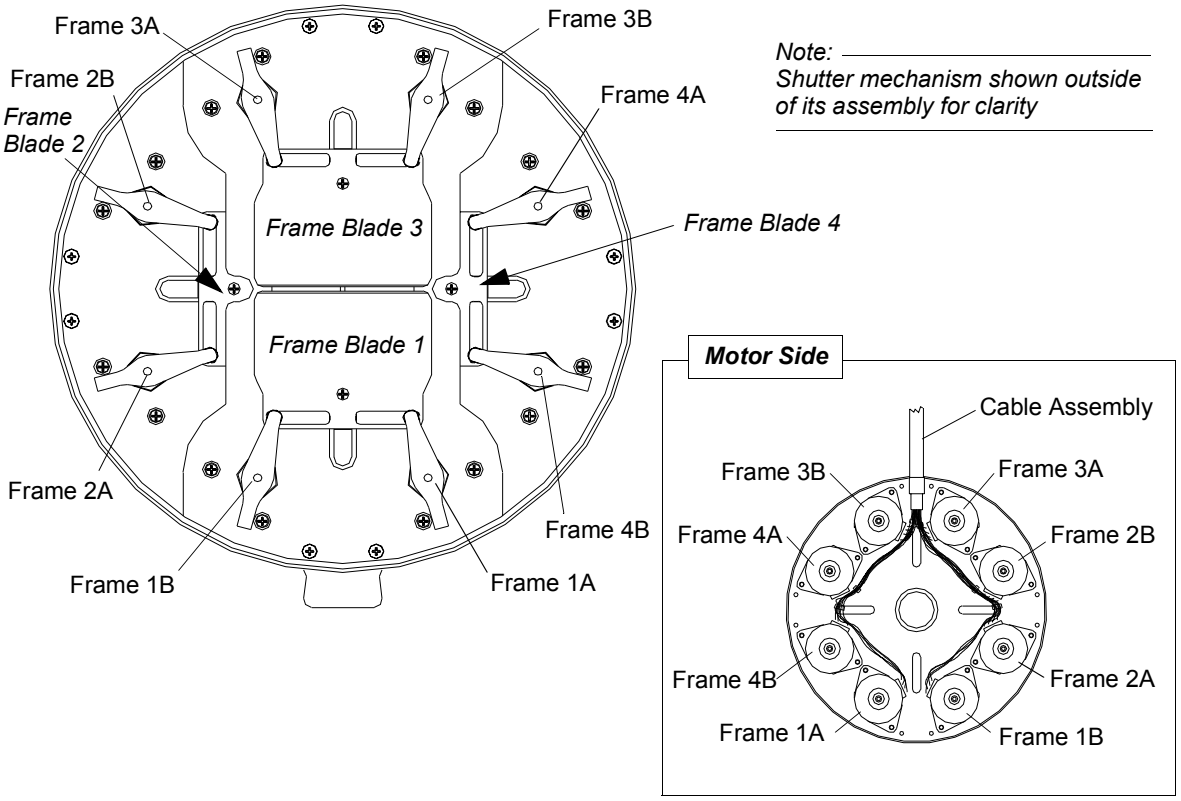

Figure 3-3: Shutter Mechanism

Table 3-15: Shutter Mechanism DMX Map Chart

Item	% Value	DMX Value	Action
Frame 1A to Frame 4B	0	0	Open
	100	255	Closed
Shut Rot *(Shutter Rotation)*	0	0	CCW
	50	128	Center
	100	255	CW

Luminaire Timing

Timing Channel Information

Timing channel control improves the timed moves of certain groups of parameters. We provide up to four timing channels, one for focus (Pan and Tilt), one for color parameters, one for beam parameters, and one for gobo wheel position (spot version only).

Types of timing control:

- Timing Control Channel: the luminaire uses its timing channel value to calculate a smooth continuous movement for a given time and transition.
- Console Timing: the console calculates the time duration between the DMX increments to be sent for a given time and transition.

Guidelines:

- Timing channels support time values of up to six minutes.
- To use a timing channel instead of console timing, it is necessary to set the timing channel to the desired value and set cue and/or parameter time to zero. A combination of time controls can produce unexpected results.
- The default value setting in the profile should be 255 (proportional control) to allow smooth movement when using console timing.
- The timing channel data should change as a snap. A zero value will give the fastest move, however, without any smoothing this can appear "steppy" in console timed moves.

Note: Some parameters have been excluded from the timing channels. Wheel spin and gobo rotation rate changes are not affected by timing channels.

Table 3-16: VL3500 Spot Luminaires Channel Function / Timing Channel Relationship

Channel Function	Timing Channel			
	Focus Time	Color Time	Beam Time	Gobo Time
Pan (Hi Byte/Lo Byte)	♦			
Tilt (Hi Byte/Lo Byte)	♦			
Blue		♦		
Amber		♦		
Magenta		♦		
CTO		♦		
Color Wheel		♦		
Zoom			♦	
Edge			♦	
Shutters			♦	
Gobo Wheels 1 and 2				♦

A timing value of zero is full speed. A time value of 100% (or 255 in DMX) enables the associated parameter(s) to follow cue fade time (console time) rather than the timing channel.

Note: The particular storing syntax for your console, as well as instructions on how to write part cues, can be found in the operation manual for that console.

To use these channels, you must:

Step 1. Create the cue, including color, gobo, edge and diffusion as required.

Step 2. Decide which fixtures and which parameter groups will use timing channels.

Step 3. Assign a value to the particular timing channel(s) you wish to use (for timing information, see chart on next page).

Step 4. Set console timing (or cue fade time) for parameters and timing channels to zero seconds.

Step 5. Store cue.

Note: Avoid changing timing channel values in a fading cue. This can cause unexpected behavior in the luminaire as the timing channel value is updated over time. Timing channel values and the final destination of the parameters affected by the timing channel should always be sent in a zero count.

Timing channels can be set in either % or 0 - 255 (DMX) modes, with the following values assigned:

Table 3-17: Timing Channels Map

% Value	DMX	= Seconds
	0	Full Speed
	1	0.2
	2	0.4
1	3	0.6
	4	0.8
2	5	1
	6	1.2
	7	1.4
3	8	1.6
	9	1.8
4	10	2
	11	2.2
	12	2.4
5	13	2.6
	14	2.8
6	15	3
	16	3.2
	17	3.4
7	18	3.6
	19	3.8
8	20	4
	21	4.2
	22	4.4
9	23	4.6
	24	4.8
10	25	5
	26	5.2
	27	5.4
11	28	5.6
	29	5.8
	30	6
12	31	6.2
	32	6.4
13	33	6.6
	34	6.8
	35	7.0
14	36	7.2
	37	7.4
15	38	7.6

Table 3-17: Timing Channels Map (Continued)

% Value	DMX	= Seconds
	39	7.8
	40	8
16	41	8.2
	42	8.4
17	43	8.6
	44	8.8
	45	9
18	46	9.2
	47	9.4
19	48	9.6
	49	9.8
	50	10
20	51	10.2
	52	10.4
	53	10.6
21	54	11
	55	11
22	56	12
	57	12
	58	13
23	59	13
	60	14
24	61	14
	62	14
	63	15
25	64	15
	65	16
26	66	16
	67	16
	68	17
27	69	17
	70	18
28	71	18
	72	18
	73	19
29	74	19
	75	20
30	76	20
	77	20
	78	21
31	79	21
	80	21

Table 3-17: Timing Channels Map (Continued)

% Value	DMX	= Seconds
	81	22
32	82	22
	83	23
33	84	23
	85	23
	86	24
34	87	24
	88	25
35	89	25
	90	25
	91	26
36	92	26
	93	27
37	94	27
	95	27
	96	28
38	97	28
	98	29
39	99	29
	100	29
	101	30
40	102	30
	103	30
	104	31
41	105	31
	106	32
42	107	32
	108	32
	109	33
43	110	33
	111	34
44	112	34
	113	34
	114	35
45	115	35
	116	36
46	117	36
	118	36
	119	37
47	120	37
	121	38
48	122	38

Table 3-17: Timing Channels Map (Continued)

% Value	DMX	= Seconds
	123	38
	124	39
49	125	39
	126	39
	127	40
50	128	40
	129	41
51	130	41
	131	41
	132	42
52	133	42
	134	43
53	135	43
	136	43
	137	44
54	138	44
	139	45
55	140	45
	141	45
	142	46
56	143	46
	144	47
57	145	47
	146	47
	147	48
58	148	48
	149	49
59	150	49
	151	49
	152	50
60	153	50
	154	50
	155	51
61	156	51
	157	52
62	158	52
	159	52
	160	53
63	161	53
	162	54
64	163	54
	164	54

Table 3-17: Timing Channels Map (Continued)

% Value	DMX	= Seconds
	165	55
65	166	55
	167	56
66	168	56
	169	56
	170	57
67	171	57
	172	58
68	173	58
	174	58
	175	59
69	176	59
	177	59
	178	60
70	179	60
	180	65
71	181	65
	182	65
	183	70
72	184	70
	185	75
73	186	75
	187	75
	188	80
74	189	80
	190	85
75	191	85
	192	85
	193	90
76	194	90
	195	95
77	196	95
	197	95
	198	100
78	199	100
	200	110
79	201	110
	202	110
	203	120
80	204	120
	205	120
81	206	130

Table 3-17: Timing Channels Map (Continued)

% Value	DMX	= Seconds
	207	130
	208	140
82	209	140
	210	140
	211	150
83	212	150
	213	160
84	214	160
	215	160
	216	170
85	217	170
	218	180
86	219	180
	220	180
	221	190
87	222	190
	223	200
88	224	200
	225	200
	226	210
89	227	210
	228	210
	229	220
90	230	220
	231	230
91	232	230
	233	230
	234	240
92	235	240
	236	250
93	237	250
	238	250
	239	260
94	240	260
	241	270
95	242	270
	243	270
	244	280
96	245	280
	246	290
97	247	290
	248	290

Table 3-17: Timing Channels Map (Continued)

% Value	DMX	= Seconds
	249	300
98	250	300
	251	310
99	252	310
	253	310
	254	310
100	255	Follows Cue Data

Updating Software

Reprogramming Luminaires

In some cases, it may be desirable to upgrade the luminaire's operating software. This process requires a PC, *VLDownload.exe*, .bin files and the Luminaire Programming Kit (28.9661.0054).

Components Overview

Computer Requirements

- PC running Windows 95/98, Windows NT (4.0 or higher), or Windows 2000. (Program is not compatible with Macintosh computers.)
- Serial communication port. (RS-232 only, USB not supported.)

VL Download Program

The *VL Download.exe* program allows you to transfer new versions of the operating software (.bin files) to the luminaires via the PC. The *VL Download.exe* and current .bin files are available from the Product Downloads page at www.vari-lite.com. Instructions for installing the program on your PC are also available on the Product Downloads page.

Luminaire Programming Kit

The luminaire programming kit allows you to connect your PC to the luminaire chain in order to update software.

Luminaire Programming Kit (28.9661.0054) components:

- 6-Ft. Serial Straight Thru DB9M-F Cable (46.6033.0006)
- RS-232 to RS-485 Interface Converter (46.6036.0001)
- 6-Ft. RJ45 to 5-Pin Female XLR Cable (25.9661.0055)

Reprogramming Procedure

Note: Up to 32 luminaires can be programmed at the same time if they are data linked together. Refer to "Connecting Data and Power" on page 14. (Programming more than 32 luminaires will require programming in batches of 32 or less.)

To update luminaire software:

Step 1. From Product Downloads page at www.vari-lite.com, download and install the *VLDownload.exe* program and required .bin files onto your PC (following instructions at the website).

Step 2. Assemble Luminaire Programming Kit components by connecting *Serial Straight Thru Cable* and *RJ45-to-XLR cable* to Interface Converter.

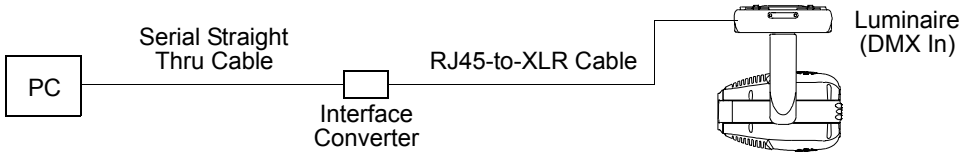

Figure 3-4: Hardware Setup

Step 3. Connect *Serial Straight Thru cable* to serial Comm Port of PC and connect *RJ45-to-XLR cable* to DMX In connector of luminaire.

Step 4. Apply power to PC and luminaire(s).

Step 5. Run *VLDownload.exe* program by selecting from Start menu Programs list or by selecting from C:\ProgramFiles\Vari-Lite\VLDownload Program directory. (Luminaire Software Download window will open.)

Step 6. At Select Comm Port section of window (refer to Figure 3-5 on next page), select serial Comm Port (Comm Port 1, Comm Port 2, Comm Port 3, or Comm Port 4) where *Serial Straight Thru Cable* is connected.

Note: DMX Data must be disconnected before downloading software to luminaires. (Do not merge with DMX signal.)

Step 7. At Select Software to Download section of window, select required luminaire software version to download by clicking its button or select Download All. (Software version is identified by the date and time: MM/DD/YY and HH:MM.) The buttons function as follows:

VL3500 button downloads the software to all VL3500 luminaires.

Download All button is the equivalent of executing all of the specific software version buttons shown in the window (if applicable). They will be executed one at a time in the order they appear in the window. This button can be used when any combination of VARI✻LITE luminaires are connected to the PC.

Step 8. Download will proceed. Once download is complete, luminaire will automatically recalibrate. Once recalibration is complete, reset (recalibrate again) luminaire.

Step 9. Click Close to exit.

Note: The History section of the window shows what specific types of luminaire software have been downloaded since the beginning of the session (window will reset once the program is closed and re-opened).

Note: Version dates shown in this graphic are for illustration purposes only and may not correspond to the version you are downloading.

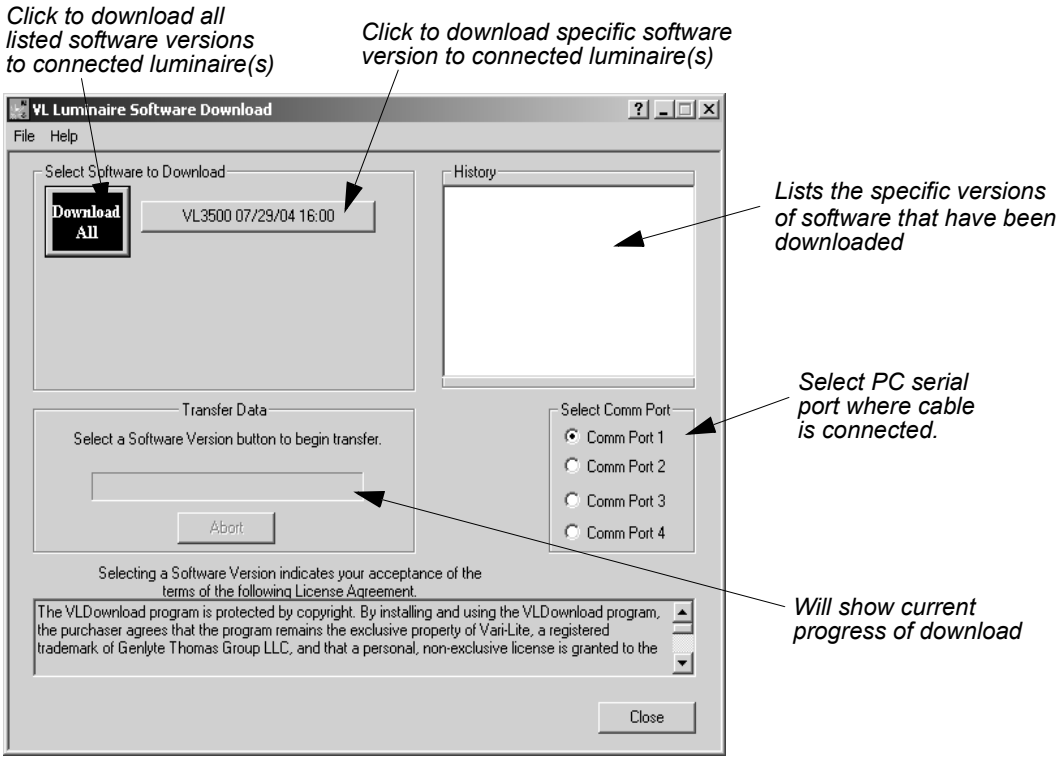

Figure 3-5: VL Download Program Window

Verify software version at luminaire:

Step 1. At Menu Display, press [Menu].

Step 2. Press [Up] / [Down] arrows until Fixture appears. Press [Enter].

Step 3. Press [Up] / [Down] arrows until Version appears. Press [Enter].

The first half of the version will be displayed as a date (MM.DD.YY). For example, 03.18.03 (March 18, 2003).

Press [Up] / [Down] arrows to display second half of version. This will be displayed as a time (HH:MM). For example, 16:00

Transferring Software From Luminaire to Luminaire

It is possible to transfer specific software versions between luminaires. As in the case of installing new software versions, multiple luminaires can be programmed at the same time if they are data linked together (refer to "Connecting Data and Power" on page 14), however a maximum of 32 luminaires can be updated at once.

Hardware Requirements

Data cables used in this process must have two twisted pairs and a shield. It is also recommended that cables meet all other USITT DMX specification requirements. Refer to "Data Cables" on page 9.

A DMX termination connector is used in this process. Refer to page 14 for more information regarding the construction of this connector.

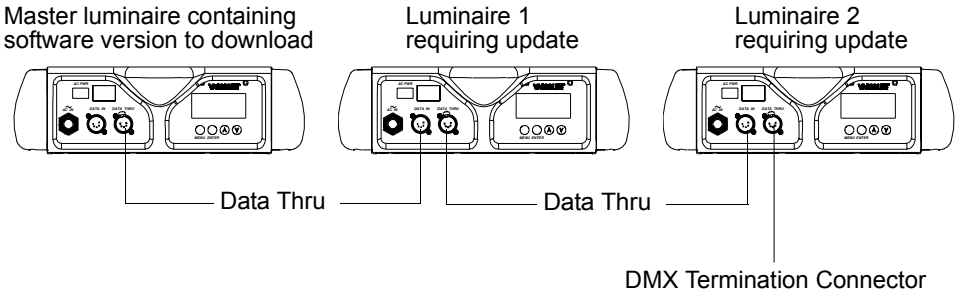

Figure 3-6: Software Transfer Setup

Transfer Procedure

This procedure is used to transfer software versions between luminaires.

Step 1. At last luminaire, install DMX termination connector into DATA THRU XLR connector.

Step 2. At master luminaire (first in chain) Menu Display, press [Menu].

Step 3. Press [Up] / [Down] arrows until Fixture appears.

Step 4. Press [Up] / [Down] arrows until Download appears. Press [Enter].

Step 5. OK? will be displayed. Press [Enter] to accept.

Step 6. Download will proceed. (Download will take 4-5 seconds.) The number of blocks displayed will be less in a luminaire-to-luminaire download than in a PC-to-luminaire download for the same software version.

Step 7. Once download is complete, luminaire will automatically recalibrate. Once recalibration is complete, reset (recalibrate again) luminaire.

Verify software version at luminaire:

Step 1. At Menu Display, press [Menu].

Step 2. Press [Up] / [Down] arrows until Fixture appears. Press [Enter].

Step 3. Press [Up] / [Down] arrows until Version appears. Press [Enter].

The first half of the version will be displayed as a date (MM.DD.YY). For example, 03.18.03 (March 18, 2003).

Press [Up] / [Down] arrows to display second half of version. This will be displayed as a time (HH:MM). For example, 16:00

CHAPTER 4.

Menu System

This chapter contains instructions for operating the luminaire using the Menu Display feature.

- **Menu Operation**
- **Menu Functions**
- **Self-Tests**

Menu Operation

What Is the Menu System?

The menu system is a programmable set of commands used to configure, address, operate, and test the luminaire. The menu system is controlled at the Menu Display available at the enclosure input panel.

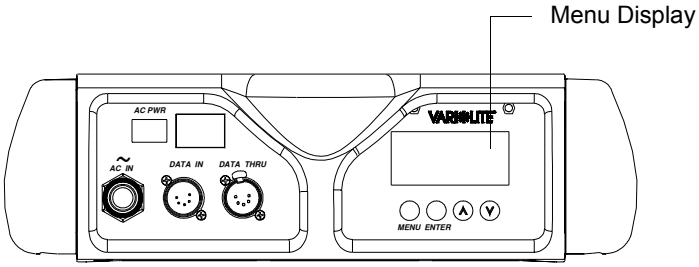

Figure 4-1: Menu Display Location

Controls Operation

The menu system is controlled by four buttons. These buttons function as follows:

[Menu] button. Displays the menu, or if at first level, the current address.

[Enter] button. Selects the current menu option or stores current data value.

[Up] arrow. Scrolls menu options upward or increases current data value.*

[Down] arrow. Scrolls menu options downward or decreases current data value.*

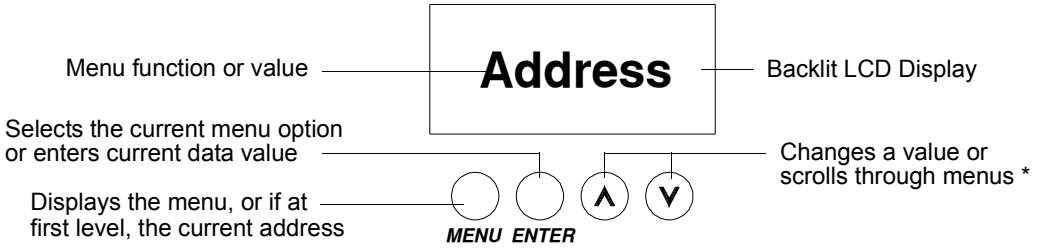

* The arrows will have opposite functions if the luminaire is hung upside down in a hanging orientation due to the automatic orientation feature. In other words, the arrow pointing downward always functions as down/decrease and the arrow pointing upward always functions as up/increase regardless of the luminaire orientation.

To enter the menu system, first press [Menu]. The functions displayed will be 1st level functions. Scroll through the 1st level functions by pressing [Up] / [Down] arrows. Once the desired function appears in the display, press [Enter]. You are now at the 2nd level. Once again, press the [Up] / [Down] arrows to scroll through 2nd level functions. Press [Enter] to access 3rd level functions and so forth. When the highest level for the function is reached, [Up] / [Down] arrows can be pressed to enter a value or select a toggle activation such as On/Off. Press [Enter] to store the value or select an action.

For example:

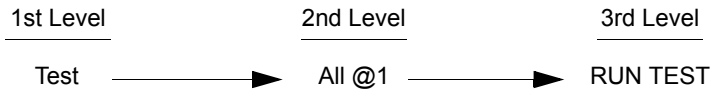

Default State

The menu display's default state during normal operation is to display the DMX address. After 10 seconds of inactivity at the display, it will change to the default state.

After longer periods of inactivity, the menu display will switch to its off state. The default state for this feature is 5 minutes, however, different time lengths can also be programmed.

To program a different time length for menu off feature:

Step 1. Press [Menu].

Step 2. Press [Up] / [Down] arrows until Config (Configuration) appears. Press [Enter].

Step 3. Press [Up] / [Down] arrows to access Display. Press [Enter].

Step 4. Press [Up] / [Down] arrows to select either 30 Sec (30 seconds), 5 Min (5 minutes), 10 Min (10 minutes), or ON (on indefinitely). Press [Enter] to set.

Shortcuts

A few button combinations are provided as shortcuts for frequently used menu functions. These shortcuts are as follows:

- Pressing [Enter] and [Up] at the same time = Lamp On
- Pressing [Enter] and [Down] at the same time = Lamp Off
- Pressing [Menu] and [Up] at the same time = Recalibrate
- Pressing [Menu] at Power up interrupts calibration. See "Program Starting Address Without Calibrating Luminaire" on page 16 for more information.

Menu Functions

Menu System Overview

The following is a graphic representation of the entire menu system.

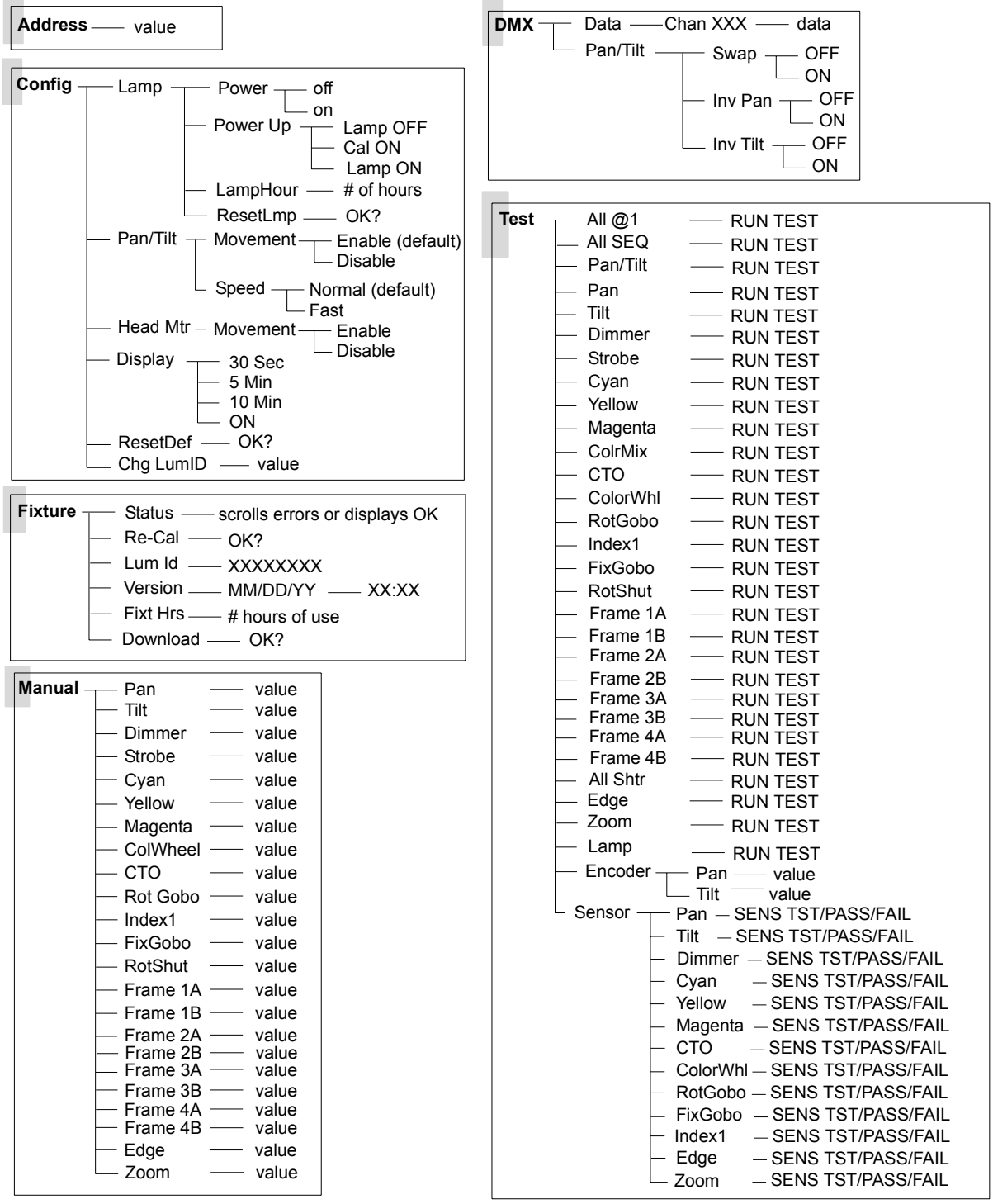

Menu System Function Chart

The following is a detailed look at the internal menu system.

Table 4-1: VL3500 Menu System Chart

1st Level	2nd Level	3rd Level	4th Level	5thLevel
Address	**XXX** *Address value*			
Config *Configuration*	**LAMP** *Lamp Options*	**Power** *Lamp Power*	**ON** (default)	
			OFF	
		Power UP *Lamp Power-up State*	**Lamp OFF** *Lamp Off*	
			Cal ON *Lamp On After Calibration*	
			Lamp ON *Lamp On* (default)	
		LampHour *Lamp Hours Used*	**XXXX** *Cumulative # of Operation Hours* (Not editable)	
		ResetLmp *Reset Lamp*	**OK?**	
	Pan/Tilt *Pan and Tilt*	**Movement** *Position Recovery*	**Enable** *Enable*	
			Disable *Disable*	
		Speed	**Normal** (default)	
			Fast	
	Head Mtr *Head Motor*	Movement *Head Movement*	**Enable** *Enable*	
			Disable *Disable*	
	Display *Display Illumination*	**30 Sec** *OFF in 30 seconds*		
		5 Min *OFF in 5 minutes*		
		10 Min *OFF in 10 minutes*		
		ON *ON indefinitely*		
	ResetDef *Reset Default*	**OK?**		
	Chg LumID *Change Luminaire ID*	**XXXX** *Value (for future use)*		
DMX *DMX Data*	**DATA** *	**Chan XXX** *DMX Channel*	**XXXX** *Value*	
	Pan/Tilt *Pan and Tilt Options*	**Swap** *Swap Pan & Tilt*	**ON**	
			OFF	
		Inv Pan *Invert Pan*	**ON**	
			OFF	
		Inv Tilt *Invert Tilt*	**ON**	
			OFF	
Fixture	**Status** *Status/Error Display*	*Scrolls error messages or displays* **OK**		
	Re-Cal *Recalibrate*	**OK?**		
	Lum Id *Luminaire ID*	**XXXXXXXX** *Luminaire ID Number*		
	Version *Version*	**MM/DD/YY** (Page 1)	**HH:MM** (Page 2)	
	Fixt Hrs *Fixture Hours*	**XXXX #** *Hours of Use*		
	Download *Download Software*	**OK?**		

Table 4-1: VL3500 Menu System Chart

1st Level	2nd Level	3rd Level	4th Level	5thLevel
Manual *Manual Commands*	**Pan** *	**XXXX** *Value*		
	Tilt *	**XXXX** *Value*		
	Dimmer	**XXX** *Value*		
	Strobe	**XXX** *Value*		
	Cyan	**XXX** *Value*		
	Yellow	**XXX** *Value*		
	Magenta	**XXX** *Value*		
	ColWheel *Color Wheel*	**XXX** *Value*		
	CTO *Color Temperature Orange*	**XXX** *Value*		
	RotGobo	**XXXX** *Value*		
	Index1	**XXX** *Value*		
	FixGobo	**XXX** *Value*		
	RotShut	**XXX** *Value*		
	Frame 1A	**XXX** *Value*		
	Frame 1B	**XXX** *Value*		
	Frame 2A	**XXX** *Value*		
	Frame 2B	**XXX** *Value*		
	Frame 3A	**XXX** *Value*		
	Frame 3B	**XXX** *Value*		
	Frame 4A	**XXX** *Value*		
	Frame 4B	**XXX** *Value*		
	Edge	**XXX** *Value*		
	Zoom	**XXX** *Value*		

* For 16-bit parameters, the data displayed will be scaled to a range of 0-4095.

Table 4-1: VL3500 Menu System Chart

1st Level	2nd Level	3rd Level	4th Level	5thLevel
Test	**All @1** *Test All mechanisms at once, 2 steps*	**RUN TEST** *Run-Test in Progress*	Press [Menu] to stop tests	
	All SEQ *Test all mechanisms in order, X steps.*	**RUN TEST** *Run-Test in Progress*		
	Pan/Tilt	**RUN TEST** *Run-Test in Progress*		
	Pan	**RUN TEST** *Run-Test in Progress*		
	Tilt	**RUN TEST** *Run-Test in Progress*		
	Dimmer	**RUN TEST** *Run-Test in Progress*		
	Strobe	**RUN TEST** *Run-Test in Progress*		
	Cyan	**RUN TEST** *Run-Test in Progress*		
	Yellow	**RUN TEST** *Run-Test in Progress*		
	Magenta	**RUN TEST** *Run-Test in Progress*		
	ColrMix	**RUN TEST** *Run-Test in Progress*		
	CTO	**RUN TEST** *Run-Test in Progress*		
	ColorWh1	**RUN TEST** *Run-Test in Progress*		
	RotGobo	**RUN TEST** *Run-Test in Progress*		
	Index1	**RUN TEST** *Run-Test in Progress*		
	FixGobo	**RUN TEST** *Run-Test in Progress*		
	RotShut	**RUN TEST** *Run-Test in Progress*		
	Frame 1A	**RUN TEST** *Run-Test in Progress*		
	Frame 1B	**RUN TEST** *Run-Test in Progress*		
	Frame 2A	**RUN TEST** *Run-Test in Progress*		
	Frame 2B	**RUN TEST** *Run-Test in Progress*		
	Frame 3A	**RUN TEST** *Run-Test in Progress*		
	Frame 3B	**RUN TEST** *Run-Test in Progress*		
	Frame 4A	**RUN TEST** *Run-Test in Progress*		
	Frame 4B	**RUN TEST** *Run-Test in Progress*		
	Edge	**RUN TEST** *Run-Test in Progress*		
	Zoom	**RUN TEST** *Run-Test in Progress*		
	Lamp *Disables Pan/Tilt and executes Home position.*	**RUN TEST** *Run-Test in Progress*		
	Encoder	**Pan**	**XXXX** *Value*	
		Tilt	**XXXX** *Value*	
	Sensor	**Pan**	**SENS TST** *Sensor*	**PASS/FAIL**
		Tilt	**SENS TST** *Sensor*	**PASS/FAIL**
		Dimmer	**SENS TST** *Sensor*	**PASS/FAIL**
		Blue	**SENS TST** *Sensor*	**PASS/FAIL**
		Amber	**SENS TST** *Sensor*	**PASS/FAIL**
		Magenta	**SENS TST** *Sensor*	**PASS/FAIL**
		CTO *Color Temperature Orange*	**SENS TST** *Sensor*	**PASS/FAIL**
		ColorWhl *Color Wheel*	**SENS TST** *Sensor*	**PASS/FAIL**
		RotGobo *Gobo 1*	**SENS TST** *Sensor*	**PASS/FAIL**
		FixGobo *Gobo 2*	**SENS TST** *Sensor*	**PASS/FAIL**
		Index1 *Gobo 1 Index*	**SENS TST** *Sensor*	**PASS/FAIL**
		Edge	**STST** *Sensor Test*	**PASS/FAIL**
		Zoom	**STST** *Sensor Test*	**PASS/FAIL**

Menu Function Definitions

For easy reference, each possible menu item is listed alphabetically in the first column by its display abbreviation. The second column follows with a definition of the abbreviation and then a third column provides an explanation of its purpose and function.

Table 4-2: Menu Function Definitions

Display	Definition	Purpose
10 Min	10 Minutes	Sets Menu Display to automatically shut off after 10 minutes of non-use.
30 Sec	30 Seconds	Sets Menu Display to automatically shut off after 30 seconds of non-use.
5 Min	5 Minutes	Sets Menu Display to automatically shut off after 5 minutes of non-use.
Address	Address	Accesses option for setting luminaire DMX starting address.
All @1	All At Once	Tests all internal mechanisms at once, in two steps.
All SEQ	All Sequence	Tests all internal mechanisms in sequence for X steps.
Yellow	Yellow	Specifies yellow color parameter for manual control (**Manual**) or testing (**Test**).
Cyan	Cyan	Specifies cyan color parameter for manual control (**Manual**) or testing (**Test**).
Cal ON	Calibration On	Configures arc luminaire so that lamp will strike after calibration.
Chan XXX	DMX Channel	Specifies DMX channel for display of current data value.
Chg LumID	Change Luminaire ID	*For future use*.
ColrMix	Color Mixer	Specifies color mixing mechanism for testing (**Test**).
ColorWhl	Color Wheel	Specifies color wheel for manual control (**Manual**) or testing (**Test**).
Config	System Configuration	Accesses options for setting lamp, pan/tilt, and Menu Display defaults. Also accesses lamp information such as number of hours used, along with its respective reset function.
CTO	CTO Function	Specifies CTO (color temperature orange) parameter for manual control (**Manual**) or testing (**Test**).
Data	DMX Data	Accesses option for setting DMX address channel.
Dimmer	Dimmer	Specifies dimmer mechanism for manual control (**Manual**) or testing (**Test**).
Disable	Disable	Disables a function.
Display	Display	Accesses options for Menu Display illumination defaults.
DMX	DMX	Accesses options for DMX system settings.
Download	Download	Initiates download of luminaire software.
Edge	Edge	Specifies edge function for manual control (**Manual**) or testing (**Test**).
Enable	Enable	Enables a function.
Encoder	Encoder	Accesses pan/tilt encoders for diagnostic testing.
FAIL	Test Fail	Indicates that a test has failed.
FixGobo	Gobo Wheel 1	Specifies gobo wheel 1 (rotating gobo wheel) for manual control (**Manual**) and testing (**Test**)
Fixt Hrs	Fixture Hours	Displays total number of hours luminaire has been powered on.
Fixture	Fixture	Accesses luminaire information such as serial number, software version, and total operation hours. Also accesses recalibration and download options.
Frame XX	Frame Side	Specifies individual shutter frames (Frame 1A, 1B, 2A, 2B, 3A, 3B, 4A, or 4B) in shutter mechanism for manual control (**Manual**) and testing (**Test**)
Head Mtr	Head Motor	Configures head movement options.

Table 4-2: Menu Function Definitions (Continued)

Display	Definition	Purpose
Index1	Gobo Index	Specifies rotating the gobo index for manual control (**Manual**) and testing (**Test**) (EOT sensor, etc.)
Inv Pan	Invert Pan	Reverses pan action for special focus requirements.
Inv Tilt	Invert Tilt	Reverses tilt action for special focus requirements.
Lamp	Lamp	Accesses lamp power-up options, reset and information (**Config**) or presets the Zoom and Edge to a specific setting for Lamp adjustment (**Test**).
Lamp OFF	Lamp is Off	Configures arc luminaire so that lamp will not strike upon power up.
Lamp ON	Lamp is On	Configures arc luminaire so that lamp will strike upon power up.
LampHour	Lamp Hours	Displays total number of lamp operating hours.
Lum Id	Luminaire ID	Displays unique luminaire ID number.
Magenta	Magenta	Specifies magenta parameter for manual control (**Manual**) or testing (**Test**).
Manual	Manual	Accesses options for luminaire mechanism control by entry of data values.
Movement	Movement	Enables or disables pan and tilt movement.
OFF	Off	Turns off a function.
OK	Okay	Indicates calibration has completed and no errors have occurred.
OK?	Okay?	Prompt for pressing [Enter] before an action is executed.
ON	On Indefinitely	Sets Menu Display to stay on until programmed otherwise (**Display**) or turns on a function.
Pan	Pan	Specifies pan function for manual control (**Manual**) or testing (**Test**).
Pan/Tilt	Pan/Tilt	Accesses pan and tilt options for focus swap function, movement enable/disable, manual control and testing.
PASS	Test Pass	Indicates that a test has passed.
Power	Lamp Power	Accesses options to turn lamp on or off.
Power Up	Power Up	Accesses options for lamp power up state.
Program	Programming	Currently programming the new version of software.
Re-Cal	Recalibrate	Recalibrates luminaire.
ResetDef	Reset Defaults	Resets default system configuration values.
ResetLmp	Reset Lamp	Resets lamp hour and strike counters. (For use when new lamp is installed.)
RotGobo	Gobo Wheel 1	Specifies gobo wheel 2 (fixed gobo wheel) for manual control (**Manual**) and testing (**Test**)
Rot Shut	Rotating Shutter	Specifies shutter mechanism rotating function for manual control (**Manual**) and testing (**Test**)
RUN TEST	Run Test	Indicates that a mechanism test is in progress.
Sensor	Sensors	Accesses sensor types for diagnostic testing.
Setup	Setup	Accesses unit model type options (do not change).
Status	Status/Error	Allows scrolling through error list or displays **OK** if no errors.
Strobe	Strobe	Specifies strobe function for manual control (**Manual**) or testing (**Test**).
STST	Sensor Test	Indicates that a system sensor test is in progress.
Swap	Swap	Swaps pan/tilt action for special focus requirements.
Test	Test	Accesses diagnostic tests for internal mechanisms.
Tilt	Tilt	Specifies tilt function for manual control (**Manual**) or testing (**Test**).
Version	Version	Displays current software version date and time (in two pages).
Zoom	Zoom Function	Specifies zoom function for manual control (**Manual**) or testing (**Test**).

Self-Tests

Running Parameter Tests

The luminaire is capable of running self-tests by using the Test menu functions.

When running tests on multiple luminaires, a DMX termination connector is required at the last luminaire in the link. Refer to "Connecting Data and Power" on page 14 for more information regarding the construction of this connector.

Note: After 10 seconds of inactivity, the menu display will change to the default state showing the address.

To connect luminaires for simultaneous testing:

Step 1. At last luminaire, install a DMX termination connector into DATA THRU XLR connector.

Step 2. At master luminaire Menu Display, press [Menu].

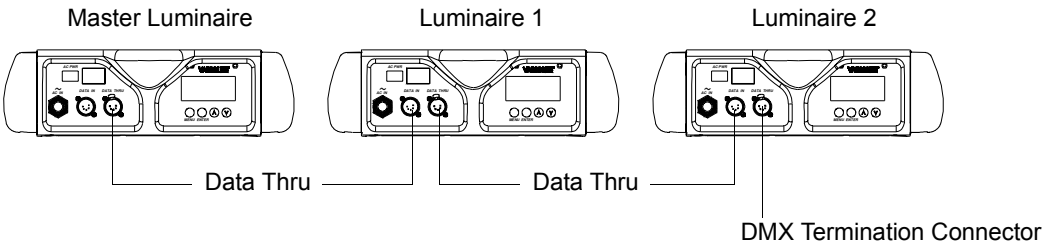

Figure 4-2: Testing Setup

To run tests:

Step 1. Press [Menu].

Step 2. Press [Up] / [Down] arrows until Test appears. Press [Enter].

Step 3. Use [Up] / [Down] arrows to select a parameter to test. Refer to "Menu System Function Chart" on page 49 for a complete list of test parameters which can be chosen.

Step 4. Press [Enter] to run test.

Step 5. Press [Menu] to stop test at any time.

Movement Disable

The Movement option allows pan and tilt to be disabled so that the luminaire can be placed in any position for testing without movement occurring. In order to regain full control of the luminaire, Movement will need to be enabled after testing.

Note: When using the Movement option, pan and tilt will be disabled for all the luminaires that are linked.

To set movement option:

Step 1. Press [Menu].

Step 2. Press [Up] / [Down] arrows until Config appears. Press [Enter].

Step 3. Press [Up] / [Down] arrows until Pan/Tilt appears. Press [Enter].

Step 4. Movement will be displayed. Press [Enter].

Step 5. Use [Up] / [Down] arrows to select Enable or Disable. Press [Enter] to select.

Notes

APPENDIX A.

Troubleshooting and Maintenance

This appendix provides instructions for troubleshooting and routine maintenance which may be necessary during the life of the luminaire.

- **Troubleshooting**
- **Routine Maintenance**

WARNING: All maintenance procedures are to be performed with power removed from the luminaire. Never remove covers or backcap while lamp is in operation.

Troubleshooting

Error Messages

If a problem occurs during luminaire calibration, at the end of the calibration sequence the Menu Display will cycle through any applicable error message(s) until the end of the list is reached. To review the error messages again, it will be necessary to access them using the Status function.

To access error messages:

Step 1. Press [Menu].

Step 2. Press [Up] / [Down] arrows until Fixture appears. Press [Enter].

Step 3. Press [Up]/ [Down] arrows to access Status. Press [Enter]. (Display will now scroll through any error messages or display OK if no errors.)

Table A-1: Error Messages

Display	Message
OK	No Errors Found
Pan/No Sens	Pan sensor not found.
Pan/Encoder/Fail	Pan encoder failure.
Tilt/No Sens	Tilt sensor not found.
Tilt/Encoder/Fail	Tilt encoder failure.
Index1/No Sens	Gobo 1 Index sensor not found.
RotGobo/No Sens	Rotating Gobo wheel sensor not found.
FixGobo/No Sens	Fixed Gobo wheel sensor not found.
Dimmer/No Sens	Dimmer sensor not found.
Cyan/No Sens	Cyan sensor not found.
Yellow/No Sens	Yellow sensor not found.
Magenta/No Sens	Magenta sensor not found.
ColWheel/No Sens	Color wheel sensor not found.
CTO/No Sens	CTO sensor not found.
Zoom/No Sens	Zoom sensor not found.
Edge/No Sens	Edge sensor not found.

Troubleshooting Guide

If a problem is suspected, first try recalibrating the luminaire to prompt an error message. The chart below provides possible causes and remedies for various error messages and/or symptoms.

Table A-2: Troubleshooting Chart

Message	Symptom	Description	Possible Cause/Remedy
Lamp Power Douse	Lamp does not strike upon start-up	Lamp Off option is configured	- Reconfigure lamp startup option in Lamp config menu.
n/a	Lamp douses frequently	Lamp Douse	Fan failure... - check fans for proper connection and operation.
n/a	Lamp will not strike	Lamp Strike Failure	Lamp cutout switch engaged... - check lamp cutout switches at lamp box and fan ducts. Bad lamp... - replace lamp. Low input voltage... - check input power (must be 200 to 264 VAC).
n/a	Luminaire behaves oddly	Profile Not Matched	Profile not set correctly... - check Setup menu for correct type (console patch / profile)).
n/a	Luminaire does not power up	No power	Switch not turned on... - verify switch is turned on. Not plugged in... - ensure A/C cable is connected to power source.
n/a	Self tests will not run or software download does not work.	DMX Data Input	Detecting DMX data... - disconnect DMX input cable.
n/a	No response to DMX data	DMX Failure	MCB connector disconnected... - check MCB DATA IN connection.
n/a	Erratic control of luminaire	DMX Termination	No DMX termination or termination not correct... - check for DMX terminator.

Routine Maintenance

Lamp Replacement

WARNING: Ensure that power is removed from luminaire when installing lamp.

CAUTION: Wear cotton gloves or other covering while installing lamp. Touching lamp glass with bare fingers will leave oil and may cause the lamp to explode or reduce lamp life. If touched, use alcohol and cotton cloth to thoroughly clean glass portion of lamp.

To replace lamp:

Step 1. Ensure power is removed from luminaire.

Step 2. At rear of luminaire head, loosen four 1/4-turn screws and slide lamp box back and out (it is hinged).

Step 3. One side at a time, press lamp lock lever forward and remove current lamp.

Step 4. Position new lamp with dimple side down. One side at a time, press lamp lock lever forward and insert lamp connector. Ensure lamp is seated fully in place.

Step 5. Close lamp box and re-tighten 1/4-turn screws.

Step 6. Align lamp as detailed in "Align Lamp" on page 61.

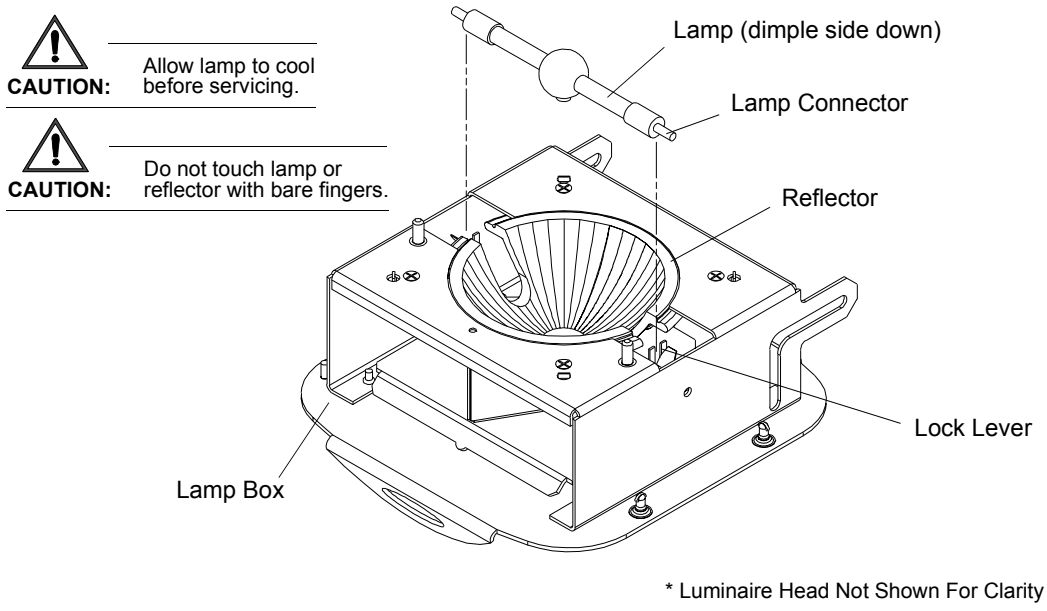

Figure A-1: Installing Lamp

Align Lamp

The design of the VL3500 luminaire optical system allows for a flat or peaked field. A flat field is one where there is no detectable hot spot and a peaked field is one where the intensity of the beam is greater at the center of the beam than at the perimeter.

After a new lamp is installed, it will be necessary to align the lamp to optimize the beam. Knobs located at the luminaire's backcap will allow adjustment.

WARNING: Backcap and adjustment knobs will be HOT during lamp operation. Wear gloves to prevent burns.

To align lamp:

Step 1. Power-up luminaire.

Step 2. At Menu Display, select Lamp from Config menu (refer to "Menu System" on page 45). (If using console, set intensity to 100%, open beam size iris and focus for hard edge.)

Step 3. Position beam on a white wall at a distance of 10 to 20 feet.

Step 4. At backcap, using X, Y and Z adjustment screws, adjust beam as required.

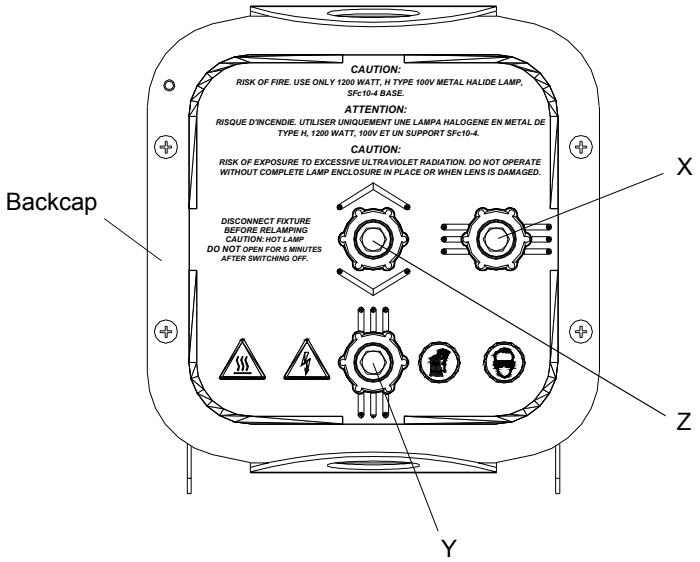

Figure A-2: Aligning Lamp

Gobo Replacement - Gobo Wheels 1 and 2

Tools:

#2 Phillips screwdriver

WARNING: Remove power from luminaire before performing maintenance. Gobos may be HOT after operation. Allow to cool before replacing.

To replace a gobo:

Step 1. Remove power from luminaire.

Step 2. Remove appropriate head cover by loosening four 1/4-turn screws:

a. To access Wheel 1, remove bottom cover as shown in Figure A-3.

b. To access Wheel 2, remove top cover as shown in Figure A-3.

Step 3. If accessing Wheel 1, also raise hinged fan duct assembly. (Fan duct has a lamp cutoff switch which will disengage power to lamp.)

Step 4. Rotate gobo wheel until required gobo position is accessible.

CAUTION: Do not push on gobo glass. Press on gobo carrier only.

CAUTION: Do not touch gobos with bare fingers. Wear cotton gloves or other covering while replacing. Clean with glass cleaner and soft cloth if required.

Step 5. For Gobo Wheel 1:

a. Remove current gobo by carefully pressing on edges of gobo carrier with fingers, pressing gobo toward front end of luminaire (toward lens), and out of wheel.

b. Install new gobo as follows:

c. Align three tabs on gobo carrier with three notches in wheel (gobo can only be oriented in one direction).

d. Insert gobo carrier into wheel, ensuring that carrier snaps into place.

e. Close fan duct assembly and replace covers.

Step 6. For Gobo Wheel 2:

a. Release (open) spring retaining clip as shown in Figure A-3.

b. Slide gobo out of gobo whee.l

c. Slide new gobo in wheel (be sure key on gobo carrier fits into slot).

d. Reinstall (close) gobo spring retaining clip. Ensure clips are position correctly and clear position sensor.

e. Replace covers.

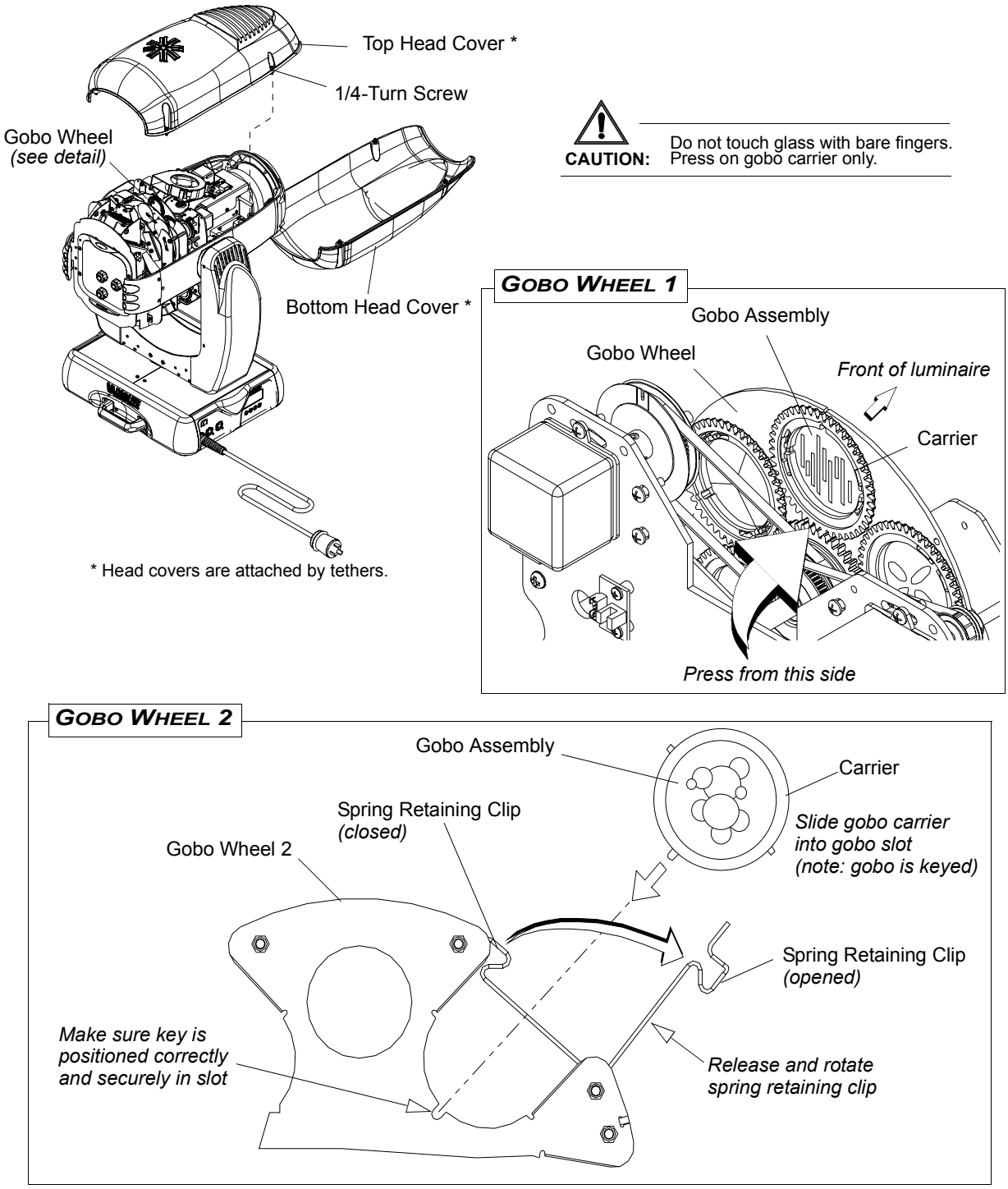

Figure A-3: Replacing Gobos

Color Filter Replacement

Tools:

#2 Phillips screwdriver

WARNING: Remove power from luminaire before performing maintenance. Filters may be HOT after operation. Allow to cool before replacing.

To replace a color filter:

Step 1. Remove power from luminaire.

Step 2. Remove top head cover by loosening four 1/4-turn screws as shown in Figure A-4.

CAUTION: Do not touch filters with bare fingers. Wear cotton gloves or other covering while replacing. Clean with glass cleaner and soft cloth if required.

Step 3. Rotate color wheel until required filter position is accessible.

Step 4. Press spring lock back until color filter is free and remove filter.

Step 5. Install new filter (orientation does not matter) ensuring that it is securely in position.

Step 6. Replace head cover.

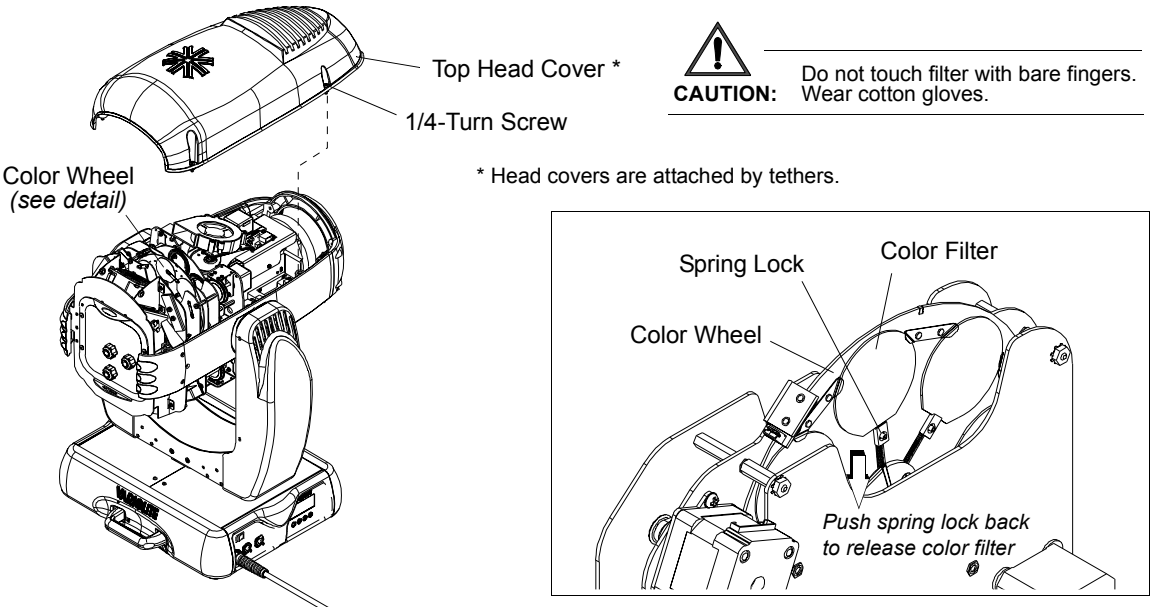

Figure A-4: Replacing a Color Filter

Cleaning Front Lens

The front lens can be cleaned using a common glass cleaner and a soft, lint-free cloth.

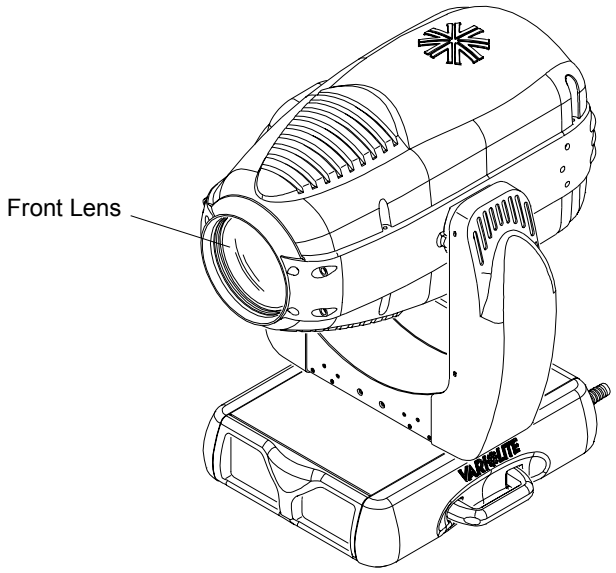

Figure A-5: Cleaning Front Lens

Notes

APPENDIX B.

Technical Specifications

VL3500 Spot Luminaire

PROGRAMMABLE FUNCTIONS

Zoom Optics

13-element 6:1 zoom optics system covering a range of 10° to 60°.

Color System

A three-filter CYM cross-fading mechanism. A fixed color wheel with six interchangeable color filters and continuous wheel rotation for additional effects. It includes a variable CTO color temperature correction filter.

Intensity Control

Full field dimming designed for both smooth timed fades and quick dimming effects.

Strobe

High-performance dual blade strobe system capable of ultra-fast operation.

Rotating Gobo Wheel

Five rotatable, indexable gobo positions available on one wheel: six-position gobo wheels with five rotatable, indexable gobo positions and one open position.

Fixed Gobo Wheel

One, seven-position fixed gobo wheel with six positions and one open position.

Edge and Pattern Focus

Variable beam focus to soften edges of gobos or spots. Remarkable depth of field capability allows morphing effects between all pattern and effects wheels.

Pan and Tilt

Smooth, time-continuous motion using stepper motors with encoder correction. Pan range is 540°, Tilt range is 270°. 0.3° resolution.

Shutter Mechanism

The shutter mechanism is comprised of four frame blades that move independently or in unison on two planes for a crisp, sharp image. The entire assembly operates in a smooth, time-continuous motion using stepper motors (two per frame blade and one for the entire mechanism). The shutter mechanism can rotate 50° in either direction and the frame blades can tilt +/- 30°.

_OPTICAL

Source

Osram HMI 1200 W/S Metal Halide Lamp, 6000°K, 85CRI

Output

24,000 lumens

Reflector

Precision glass reflector with dichroic cold mirror coating.

Color Filter

Fixed wheel color filters: .044" thick, 2.039" diameter.

Gobo

Gobos are E size. ***Metal gobos are not acceptable***.

OPERATIONAL

Power Requirements

Standard AC power distribution from 200-264 VAC, 50/60 Hz. The unit requires 7 to 12 A depending on the AC supply voltage.

Operational Temperatures

VL3500 Luminaire: -20° to 122°F (-29° to 50°C) / ***VL3500Q Luminaire***: -20° to 104°F (-29° to 40°C)

Cooling

Forced air cooled.

Control

Compatible with a wide variety of DMX512 consoles.

Weight

VL3500 Luminaire: 92 lbs. (41.8 kg) with rails / ***VL3500Q Luminaire***: 95 lbs. (43.2 kg) with rails

Spacing

Hangs on 26.0 inch (66 cm) centers. All models can be mounted and operated in any orientation.

PHOTOMETRIC

VL3500 Spot Luminaires - 1200W Metal Halide

Fixture output = 24,000 lumens. All data taken with a seasoned light source at 20 hours of life.

Zoom Lens Position	CANDELA (cd)**	BEAM ANGLE (degrees)	BEAM DIAMETER TN*	FIELD ANGLE (degrees)	FIELD DIAMETER TN*
NFOV	1,201,000	9.0	0.157	10.0	0.175
MFOV	104,400	31.0	0.555	35.0	0.631
WFOV	40,930	46.0	0.849	56.0	1.063

* Multiply throw distance by Tn to determine coverage.

** To calculate center beam illuminance (I) at a specific distance (D): $I = \frac{cd}{D^2}$

-- if (D) is in feet, (I) is in foot candles
-- if (D) is in meters, (I) is in lux

VARI*LITE® RMA Form

Vari-Lite, 10911 Petal Street, Dallas, Texas 75238 / 1-877-VARILITE / 1-214-647-8038 (fax) / customerservice@genlyte.com

Customer: _____ Date: _____

VL3500 Series

VL3500™ Series Luminaires	Part Number	Warranty Serial Numbers	Warranty	Non Warranty	Total
Tilt Motor Assy	21.9678.0765				
Pan Motor Assy	21.9678.0864				
Gobo Wheel/Shutter Assy	21.9678.1200				
Optics Assy	22.9678.0103				
Color/Dimmer/Strobe Assy	22.9678.0402				
1200W Arc Ballast w/ Rider Card	23.9678.1269				
Ignitor Assy	24.9661.1126				
Display PCB	24.9678.0825				
Control PCB	24.9678.1730				
Control PCB Daughter PCB Assy	24.9678.1732				

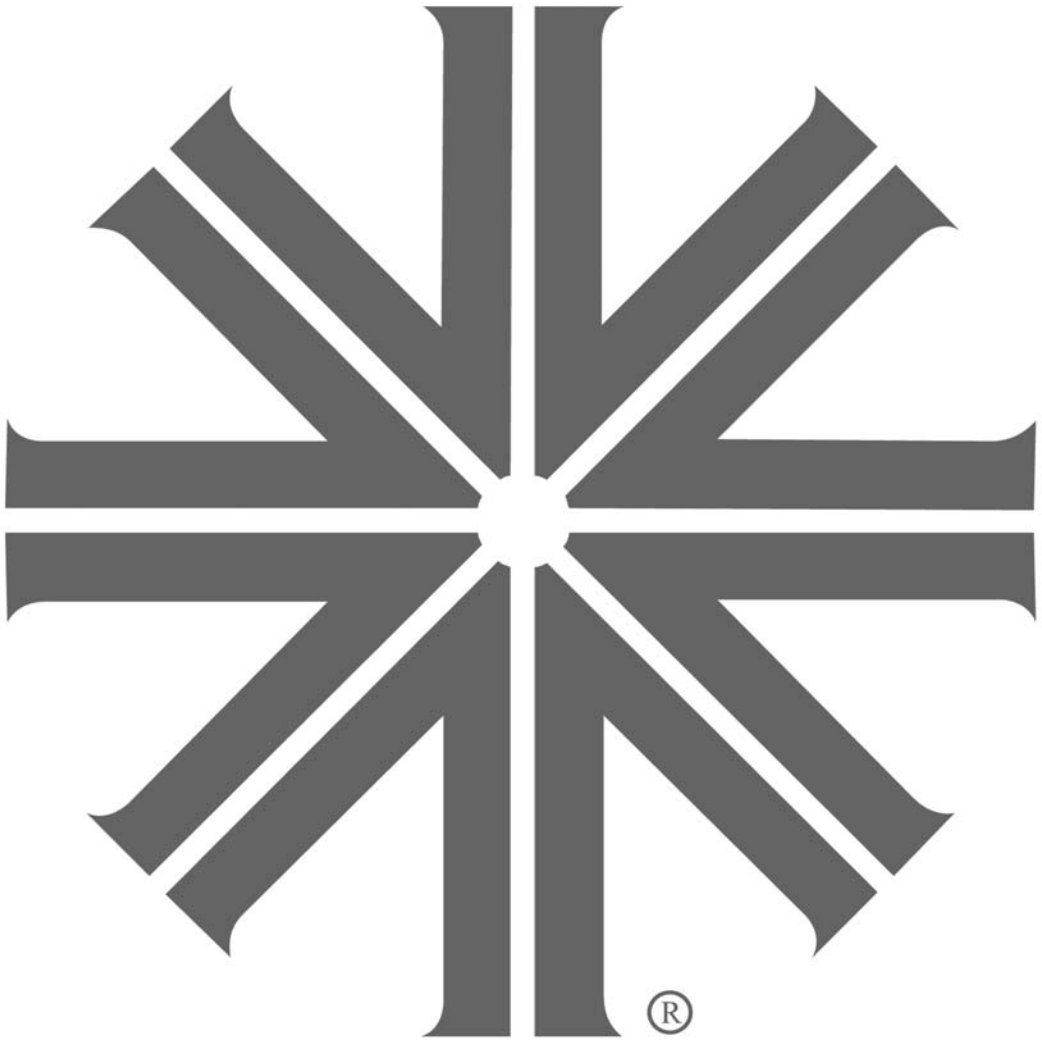

VARI*LITE©

Express yourself.

Vari-Lite
10911 Petal Street
Dallas, Texas 75238
1-877-VARI-LITE
www.vari-lite.com

©2004 Genlyte Thomas Group LLC. All rights reserved.