ENGLISH

CLAY PAKY®
www.claypaky.it

A.LEDA B-EYE K10 EASY — C61415
A.LEDA B-EYE K10 — C61419
A.LEDA B-EYE K20 — C61420

INSTRUCTION MANUAL

PRELIMINARY

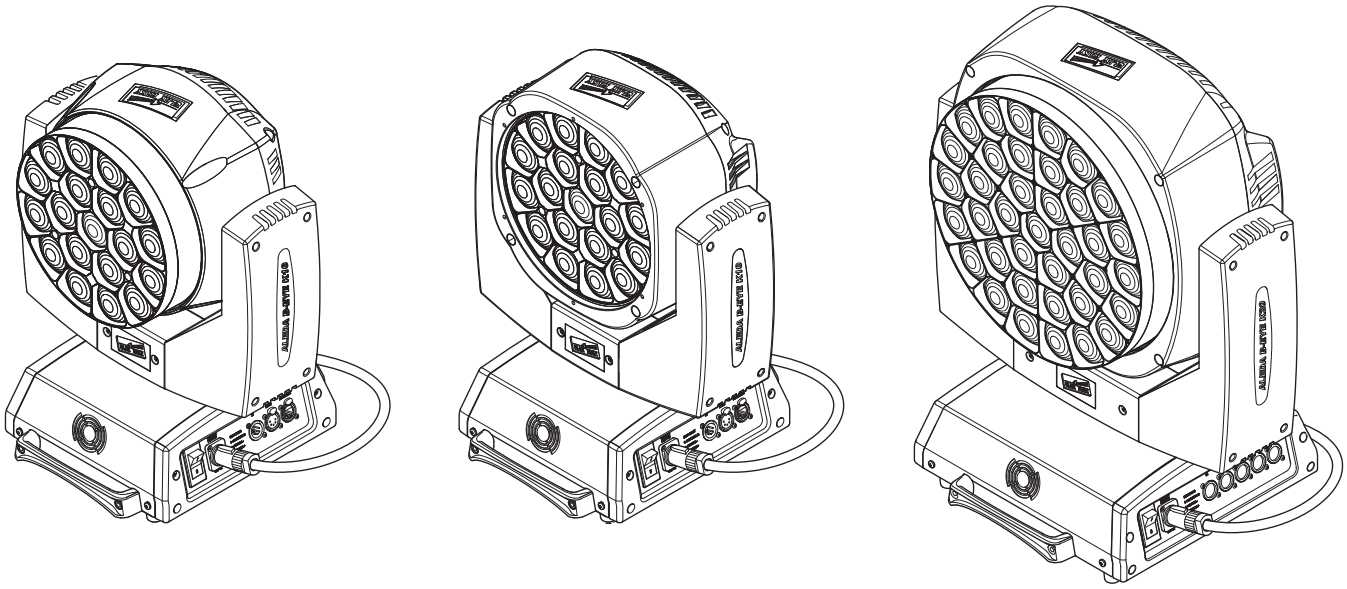

INDEX	
Page	**Contents**
2	Safety information
3	Unpacking and preparation
4	Installation and start-up
5	Control panel
7	Menu setting
15	Maintenance
17	Technical information
17	Cause and solution of problems
18	Channel functions

Congratulations on choosing a Clay Paky product!
We thank you for your custom.
Please note that this product, as all the others in the rich Clay Paky range, has been designed and made with total quality to ensure excellent performance and best meet your expectations and requirements.

Carefully read this instruction manual in its entirety and keep it safe for future reference. It is essential to know the information and comply with the instructions given in this manual to ensure the fitting is installed, used and serviced correctly and safely.

CLAY PAKY S.p.A. disclaims all liability for damage to the fitting or to other property or persons deriving from installation, use and maintenance that have not been carried out in conformity with this instruction manual, which must always accompany the fitting.

CLAY PAKY S.p.A. reserves the right to modify the characteristics stated in this instruction manual at any time and without prior notice.

SAFETY INFORMATION

• Installation
Make sure all parts for fixing the projector are in a good state of repair.
Make sure the point of anchorage is stable before positioning the projector.
The safety chain must be properly hooked onto the fitting and secured to the framework, so that, if the primary support system fails, the fitting falls as little as possible.
If the safety chain gets used, it needs to be replaced with a genuine spare.

LED 0.2 m

• Minimum distance of illuminated objects
The projector needs to be positioned so that the objects hit by the beam of light are at least 0.20 metres (8”) from the lens of the projector.

• Minimum distance from flammable materials
The projector must be positioned so that any flammable materials are at least 0.20 metres (8”) from every point on the surface of the fitting.

F

• Mounting surfaces
It is permissible to mount the fitting on normally flammable surfaces.

t_a 40°C

• Maximum ambient temperature
Do not operate the fixture if the ambient temperature (Ta) exceeds 40° C (104° F).

IP20

• IP20 protection rating
The fitting is protected against penetration by solid bodies of over 12mm (0.47”) in diameter (first digit 2), but not against dripping water, rain, splashes or jets of water (second digit 0).

• Protection against electrical shock
Connection must be made to a power supply system fitted with efficient earthing (**Class I** appliance according to standard EN 60598-1).
It is, moreover, recommended to protect the supply lines of the projectors from indirect contact and/or shorting to earth by using appropriately sized residual current devices.

• Connection to mains supply
Connection to the electricity mains must be carried out by a qualified electrical installer.
Check that the mains frequency and voltage correspond to those for which the projector is designed as given on the electrical data label.
This label also gives the input power to which you need to refer to evaluate the maximum number of fittings to connect to the electricity line, in order to avoid overloading.

t_c 90°C

• Temperature of the external surface
The maximum temperature that can be reached on the external surface of the fitting, in a thermally steady state, is 90°C (194°F).

• Maintenance
Before starting any maintenance work or cleaning the projector, cut off power from the mains supply.

• Light collimation system
This product contains internal light collimation system. Avoid intense light from any angle.

LiFePO4
Pb

• Battery
This product contains a rechargeable lead-acid or lithium iron tetraphosphate battery. To preserve the environment, please dispose the battery at the end of its life according to the regulation in force.

Risk Group 2
According to
EN 62471

• Photobiological Safety
CAUTION. Possibly hazardous optical radiation emitted from this product. Do not stare at operating lamp. May be harmful to the eyes.

The products to which this manual refers comply with the European Directives pursuant to:
• 2006/95/EC - Safety of electrical equipment supplied at low voltage (LVD)
• 2004/108/EC - Electromagnetic Compatibility (EMC)
• 2011/65/EU - Restriction of the use of certain hazardous substances (RoHS)

UNPACKING AND PREPARATION

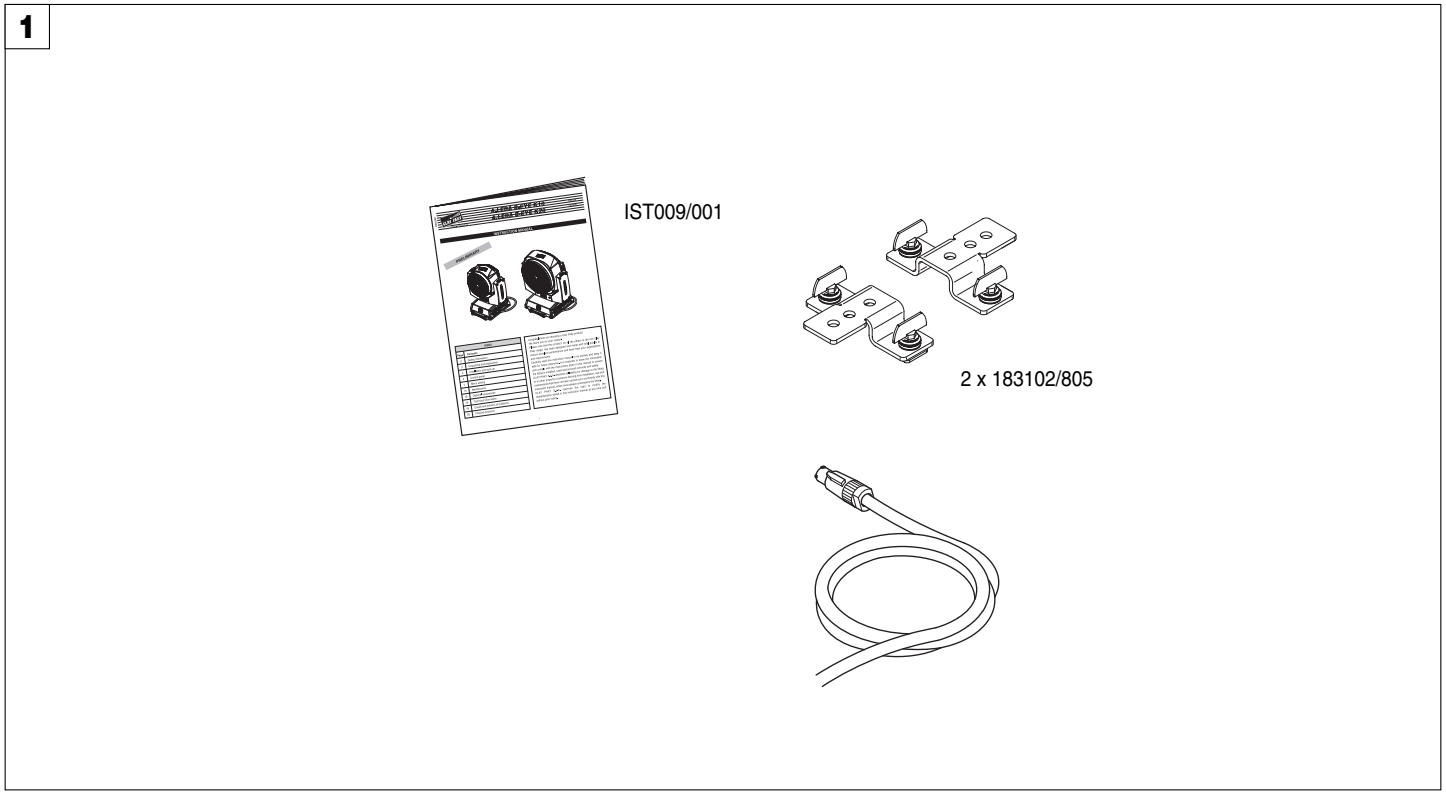

Packing contents - Fig. 1

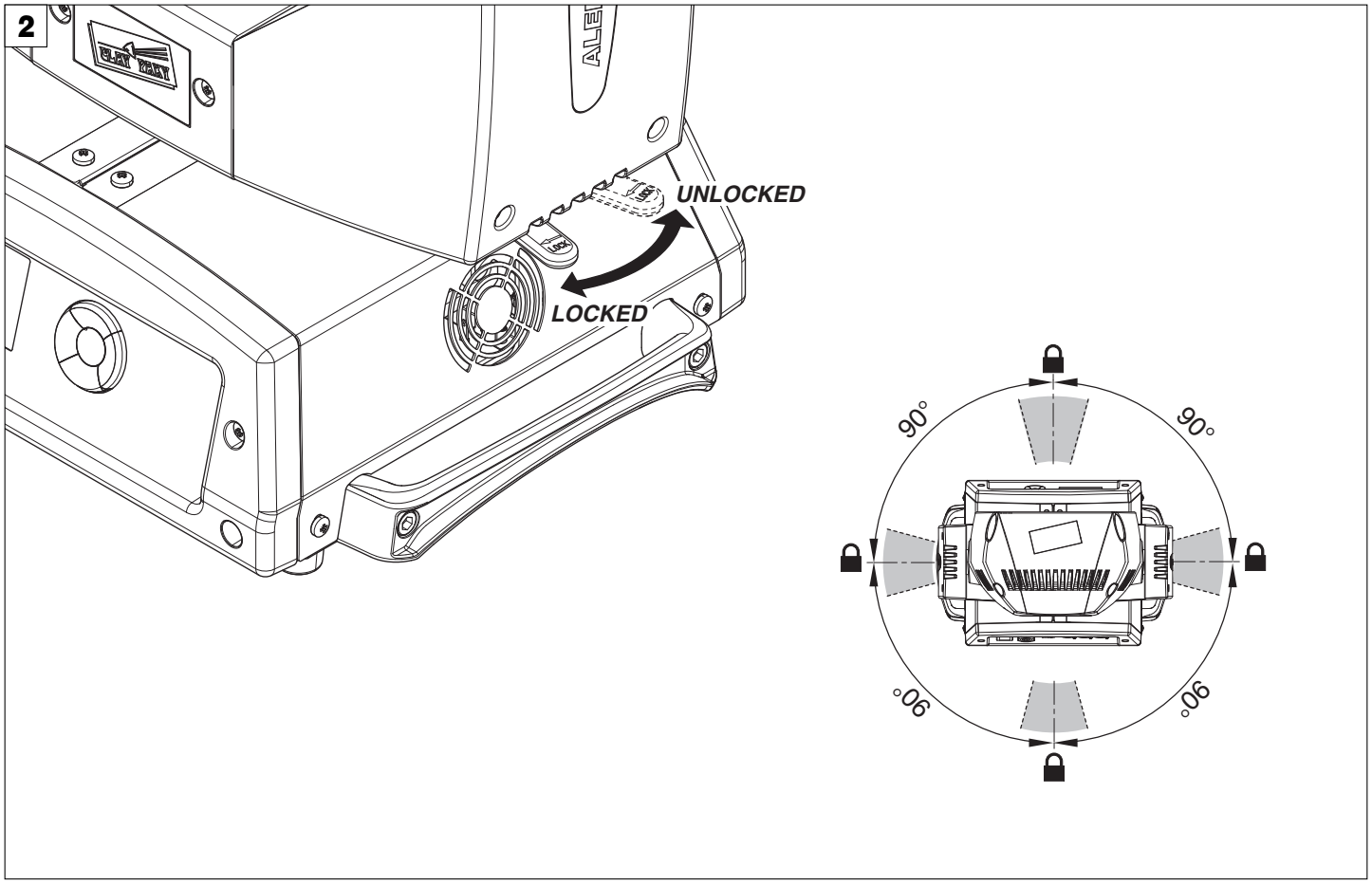

PAN Mechanism Lock and Release (every 90°) - Fig. 2

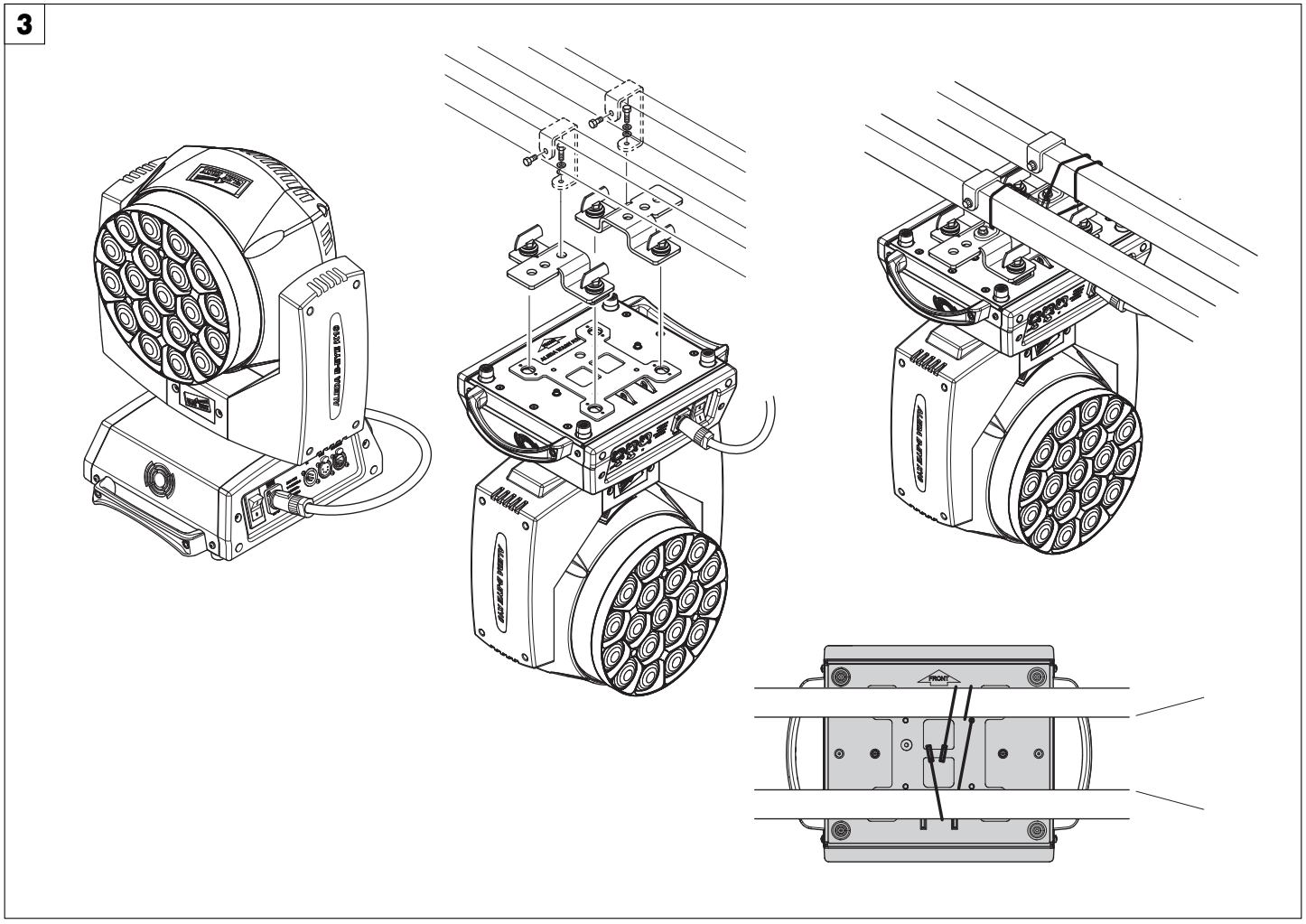

Installing the projector - Fig. 3
The projector can be installed on the floor resting on special rubber feet, on a truss or on the ceiling or wall.
WARNING: ***with the exception of when the projector is positioned on the floor, the safety cable must be fitted. (Cod. 105041/003 available on request). This must be securely fixed to the support structure of the projector and then connected to the fixing point at the centre of the base.***

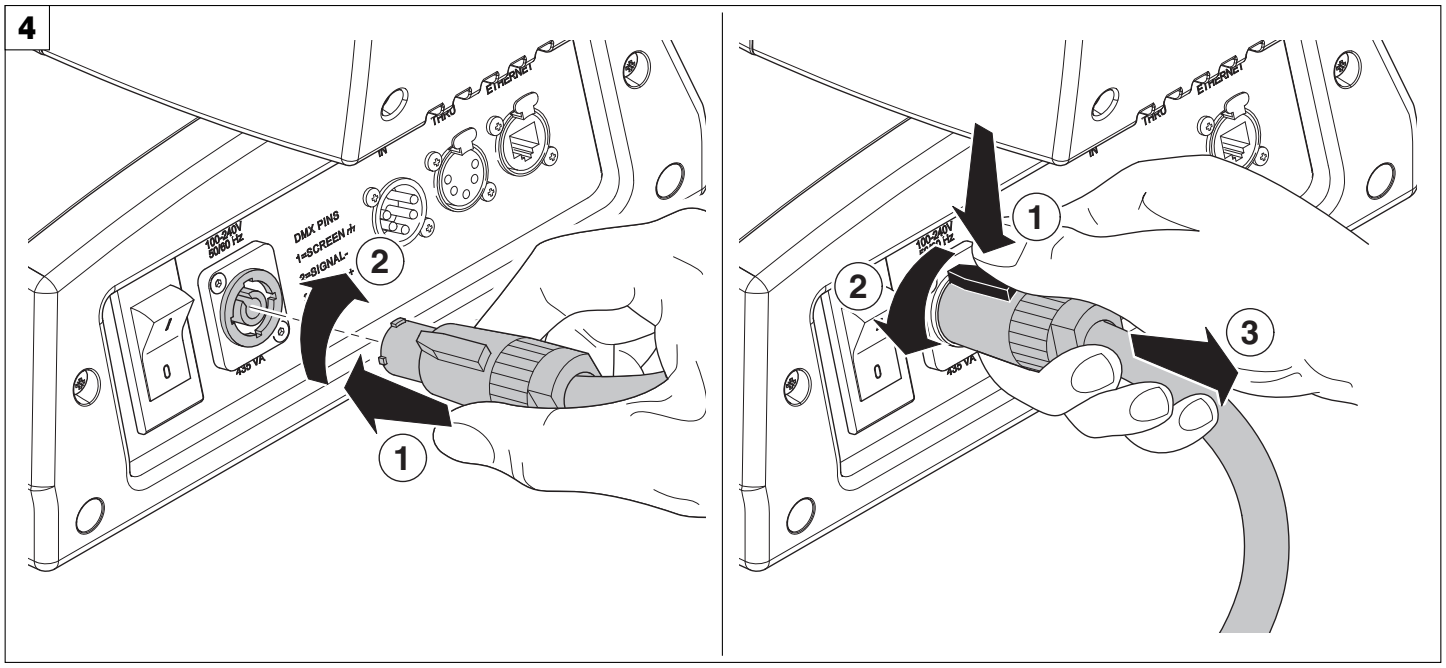

Connecting and disconnecting power cable - Fig. 4

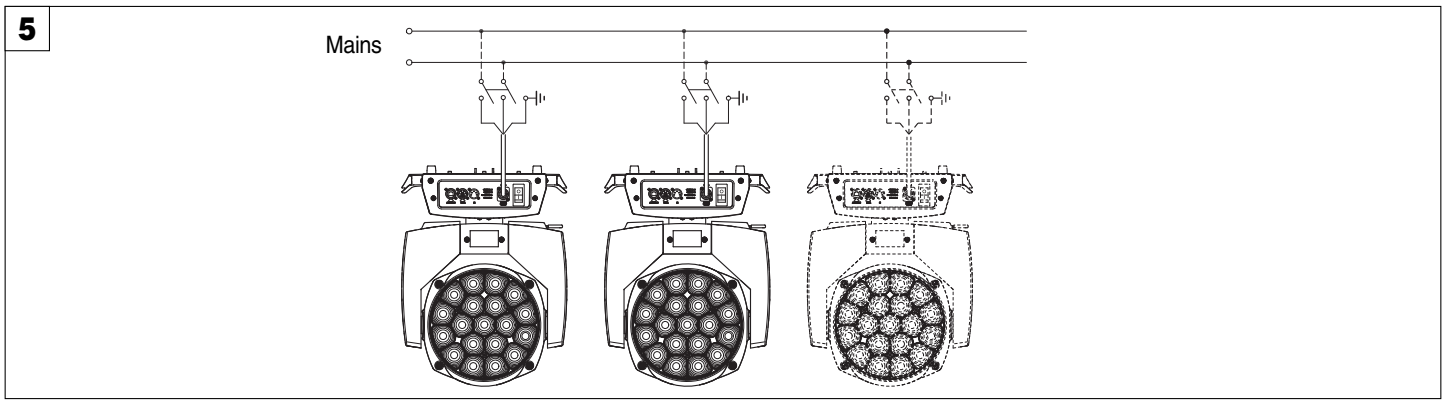

Connecting to the mains supply - Fig. 5

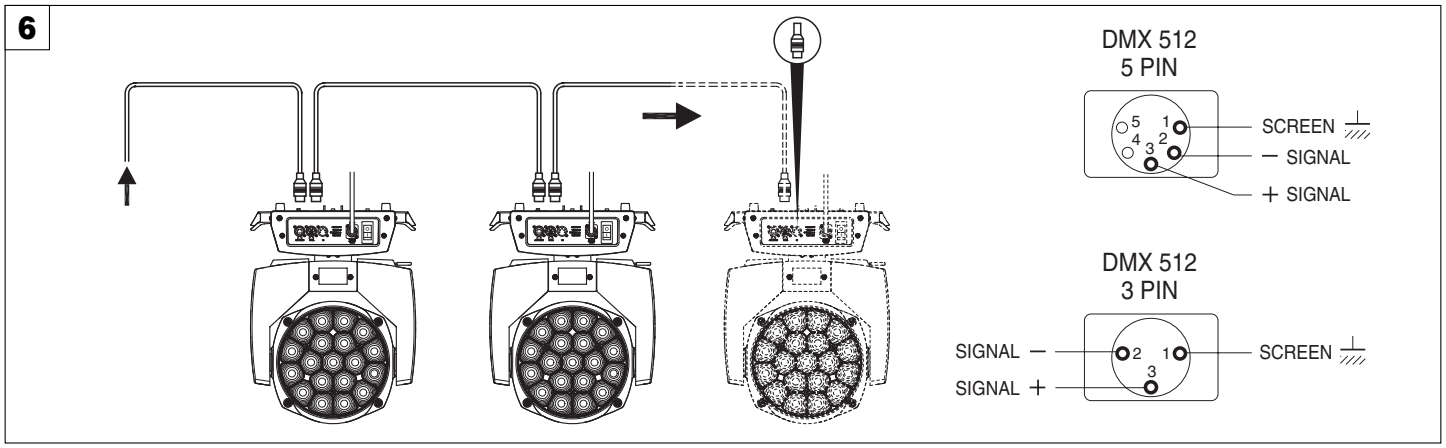

Connecting to the control signal line (DMX) - Fig. 6

Use a cable conforming to specifications EIA RS-485: 2-pole twisted, shielded, 120Ohm characteristic impedance, 22-24 AWG, low capacity. Do not use microphone cable or other cable with characteristics differing from those specified. The end connections must be made using XLR type 3 or 5-pin male/female connectors. A terminating plug must be inserted into the last projector with a resistance of 120Ohm (minimum 1/4 W) between terminals 2 and 3.

IMPORTANT: The wires must not make contact with each other or with the metal casing of the connectors. The casing itself must be connected to the shield braid and to pin 1 of the connectors.

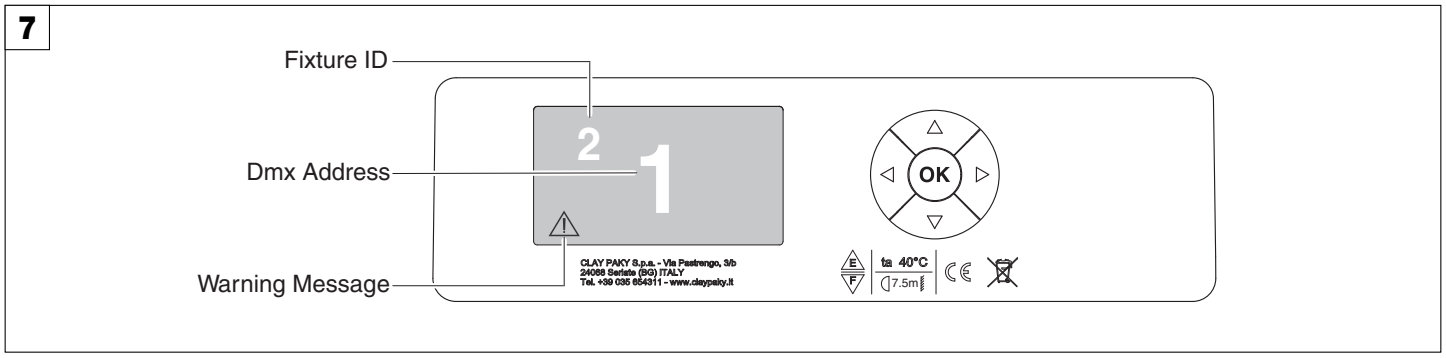

Switching on the projector - Fig. 7

Press the switch. The projector starts resetting the effects. At the same time, the following information scrolls on the display:

CLAY PAKY	**Model** **A.leda B-EYE**	**Firmware** **Version X.X.X** **Date - Hour**	**xxx (Fixture ID)** **Dmx Address xxx**	**System errors** **E: .....** **W: .....**

On conclusion of resetting in case of absence of the dmx signal, Pan and Tilt move to the “Home” position (Pan 50% - Tilt 50%). The control panel (Fig. 7) has a display and buttons for the complete programming and management of the projector menu. The display can be in one of two conditions: rest status and setting status. When it is in the rest status, the display shows the projector’s DMX address and the Fixture ID address (if set).

During menu setting status, after a wait time (about 30 seconds) without any key having been pressed, the display automatically returns to rest status. It should be noted than when this condition occurs, any possible value that has been modified but not yet confirmed with the OK key will be cancelled.

Continue →

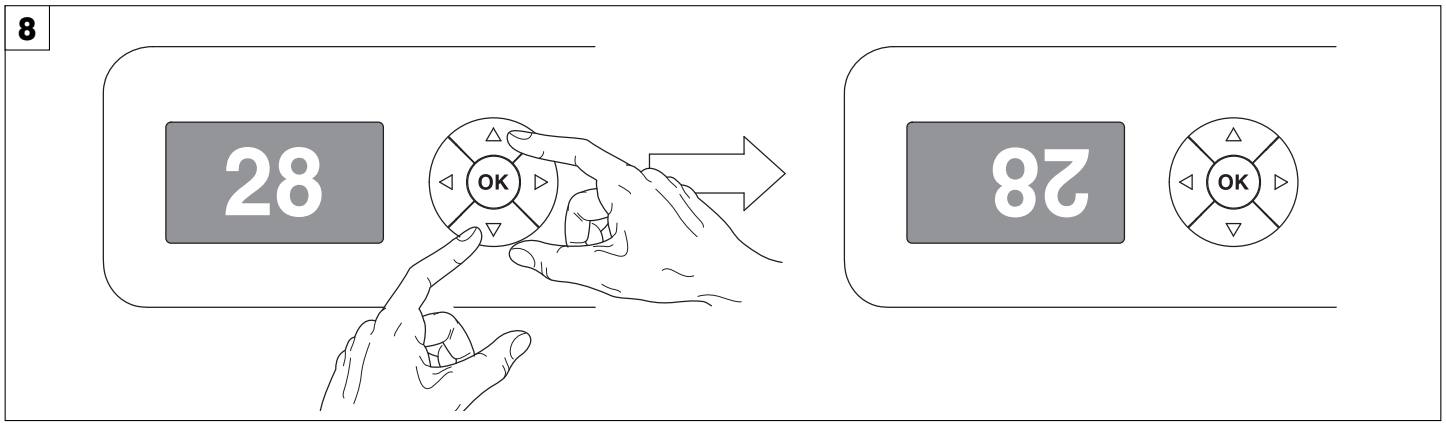

Reversal of the display - Fig. 8

To activate this function, press UP ⊕ and DOWN ⊖ keys simultaneously while the display is in the rest mode. This status will be memorised and maintained even for the next time it will be switched on. To return to the initial state, repeat the operation all over again.

Setting the projector starting address

On each projector, the starting address must be set for the control signal (addresses from 1 to 512).

The address can also be set with the projector switched off.

Setting the address: see pag. 8.

Setting the projector Fixture ID

On each projector, the Fixture ID address must be set for an easy identification of the fixtures in an installation (ID from 1 to 255).

The Fixture ID address can be set with the projector switched off.

Setting the Fixture ID: see pag. 8.

Functions of the buttons - Using the menu

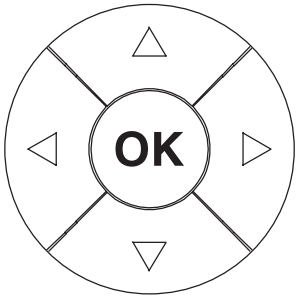

OK	Confirms the displayed value, or activates the displayed function, or enters the successive menu.
DOWN	Decreases the value displayed (with auto-repetitions) or passes to the next item in the menu.
UP	Increases the value displayed (with auto-repetitions) or passes to the previous item in a menu.
LEFT	Return to the top level.
RIGHT	Commute from units, tens, hundreds, in the "Address", "Fixture ID" and "Calibration" menù.

USING THE MENU:

1) Press OK once – “Main Menu” appears on the display.
2) Use the UP ⊕ and DOWN ⊖ keys to select the menu to be used:
   - Setup (Setup Menu): To set the setting options.
   - Option (Option Menu): To set the operating options
   - Informations (Informations Menu): To read the counters, software version and other information.
   - Manual Control (Manual control Menu): To trigger the test and manual control functions.
   - Test (Test Menu): To check the proper functionning of effects
   - Advanced (Advanced Menu): Access to the "Advanced menu" is recommended for a trained technical personnel.

   To enable the "Advanced" see pag.13
3) Press OK to display the first item in the selected menu.
4) Use the UP ⊕ and DOWN ⊖ keys to select the MENU items.

Setting addresses and options with the projector disconnected

The projector’s DMX address, as well as other possible operating options, can also be set when the appliance is disconnected from the electricity supply. All that is needed is to press OK to momentarily activate the display and thus access the settings. Once the required operations have been carried out, the display will switch off again after a wait time of 30 seconds.

MENU SETTING

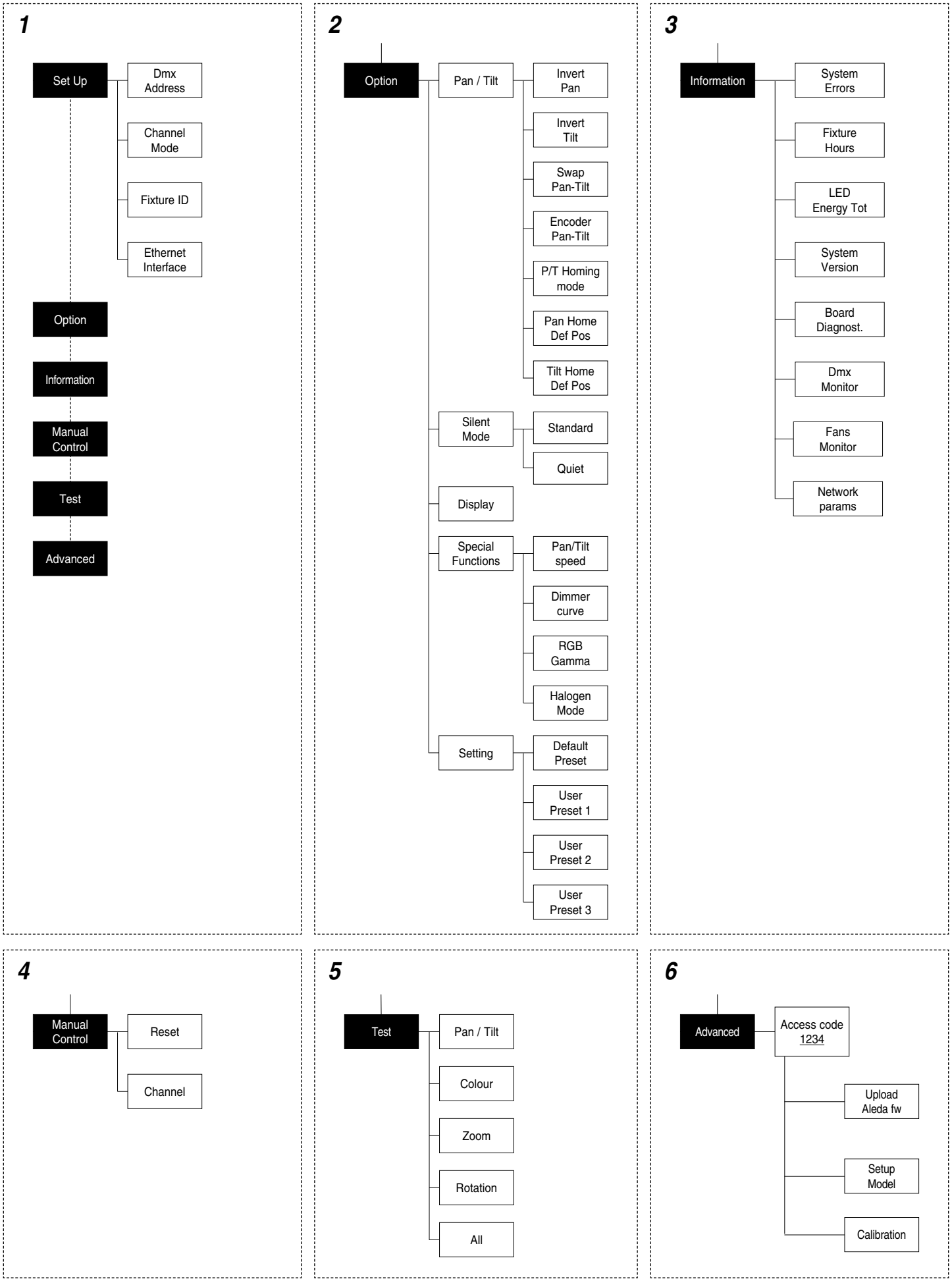

Continue →

NOTE: On grey the default options

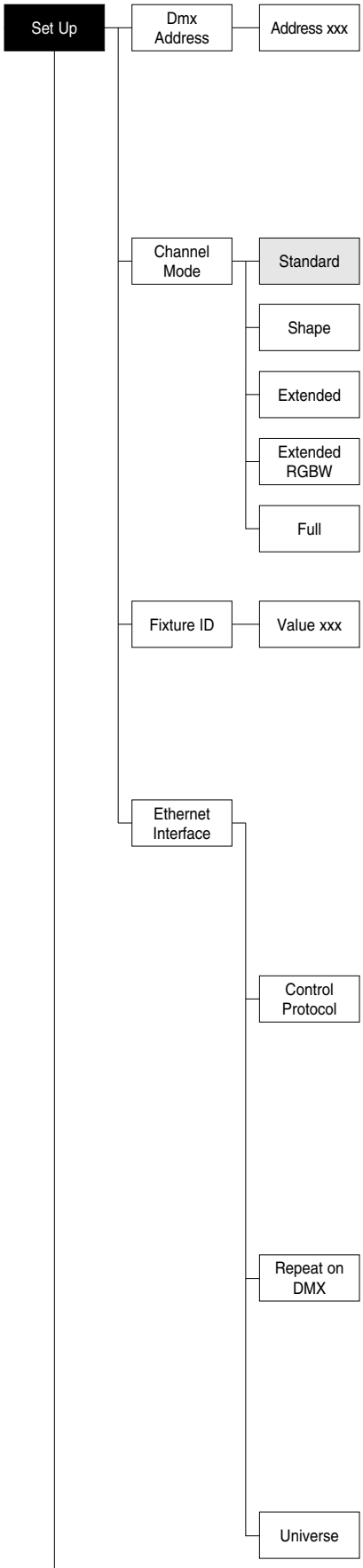

SET UP MENU

DMX ADDRESS

NOTE: without the DMX signal the Address (XXX) flashing

Allows you to select the DMX ADDRESS.

1) Press OK - the current DMX Adress appear on the display.
2) Use the UP and DOWN, RIGHT keys to plan the DMX Address.
3) Press OK to confirm the selection or LEFT to keep current settings.

CHANNEL MODE

Allows you to select a channel arrangement from the four available.

1) Press OK - the current settings appear on the display.
2) Use the UP and DOWN keys to select one of the following settings:
   - **Standard**
   - **Shape**
   - **Extended**
   - **Extended RGBW**
   - **Full**
3) Press OK to confirm the selection or LEFT to keep current settings.

FIXTURE ID

Allows you to select the FIXTURE ID.

1) Press OK - the current Fixture ID appear on the display.
2) Use the UP, DOWN, RIGHT keys to plan the Fixture ID.
3) Press OK to confirm the selection or LEFT to keep current settings.

ETHERNET INTERFACE

It lets you set the Ethernet settings to be attributed to the projector.

1) Premere OK.
2) Use the UP and DOWN keys to select the “Ethernet Interface” options to set:

Control Protocol

It lets you select the “Control Protocol” Art-net to assign according to the control unit used:

1) Press OK the current setting appears on the display.
2) Use the UP and DOWN keys to select one of the following settings:
   - **Disabled**
   - **Art-net on IP 2**
   - **Art-net on IP 10**
3) Press OK to confirm the selection or LEFT to keep the current setting.

Repeat on DMX

It lets you enable the transmission of the Ethernet protocol by DMX signal to all the connected projectors.

1) Press OK the current setting appears on the display.
2) Use the UP and DOWN keys to select one of the following settings:
   - **Disabled:** DMX transmission disabled.
   - **Enabled on primary:** DMX transmission enabled.
3) Press OK to confirm the selection or LEFT to keep the current setting.

Universe

It lets you assign the “Universe” number to be assigned to a series of projectors.

1) Press OK – the current Universe address appears on the display.
2) Use the UP, DOWN, RIGHT keys to set the Universe address.
3) Press OK to confirm the selection or LEFT to keep the current setting.

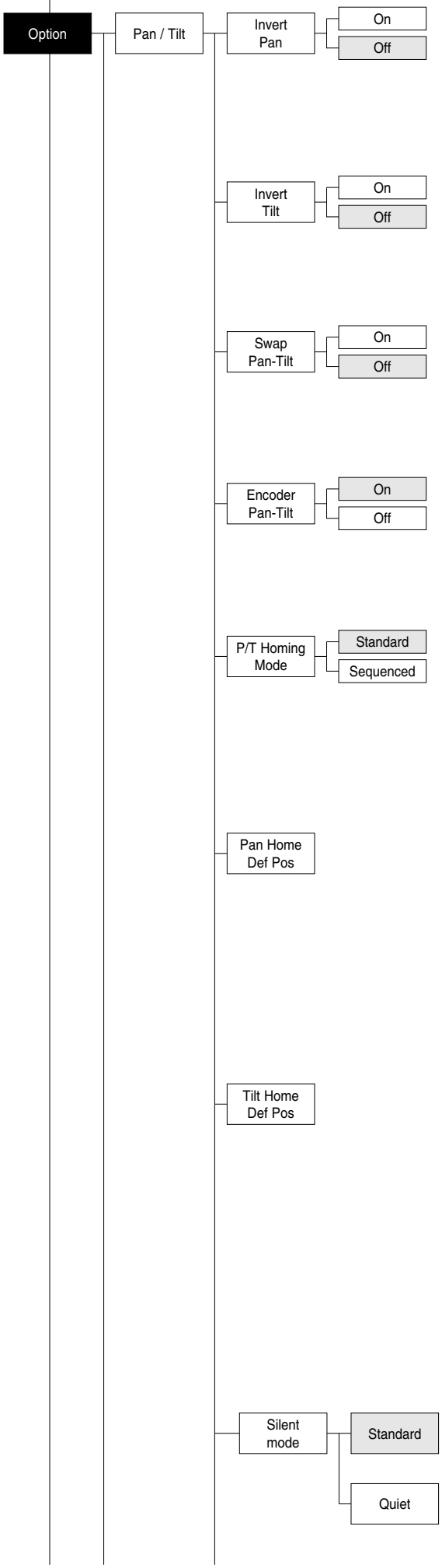

OPTIONS MENU

PAN / TILT

Invert pan

Used for reversing Pan movement.

1) Press OK - the current settings appear on the display (On or Off).
2) Use the UP ▲ and DOWN ▼ keys to enable (On) or disable (Off) PAN inversion.
3) Press OK to confirm the selection or LEFT ◀ to keep current settings.

Invert tilt

Used for reversing tilt movement.

1) Press OK - the current settings appear on the display (On or Off).
2) Use the UP ▲ and DOWN ▼ keys to enable (On) or disable (Off) Tilt inversion.
3) Press OK to confirm the selection or LEFT ◀ to keep current settings.

Swap Pan-Tilt

Used for swapping Pan and Tilt channels (as well as Pan fine and Tilt fine).

1) Press OK - the current settings appear on the display (On or Off).
2) Use the UP ▲ and DOWN ▼ keys to enable (On) or disable (Off) Pan and Tilt channel swap.
3) Press OK to confirm the selection or LEFT ◀ to keep current settings.

Encoder Pan-Tilt

Used for enabling the Pan / Tilt encoders.

1) Press OK - the current settings appear on the display (On or Off).
2) Use the UP ▲ and DOWN ▼ keys to enable (On) or disable (Off) Pan / Tilt encoders.
3) Press OK to confirm the selection or LEFT ◀ to keep current settings.

P/T Homing Mode

Lets you set the initial projector Reset mode.

1) Press OK, the current setting appears on the display.
2) Use the UP ▲ and DOWN ▼ keys to select one of the following settings:
   Standard: Pan & Tilt are simultaneously reset.
   Sequenced: Tilt is reset first followed by Pan.
3) Press OK to confirm the selection or LEFT ◀ to keep the current setting.

Pan Home Def Pos

Lets you assign the Pan channel “home” position at the end of Reset, without a DMX input signal.

1) Press OK, the current setting appears on the display.
2) Use the UP ▲ and DOWN ▼ keys to select one of the following settings:
   0 degree
   90 degrees
   180 degrees
   270 degrees (default)
3) Press OK to confirm the selection or LEFT ◀ to keep the current setting.

Tilt Home Def Pos

Lets you assign the Tilt channel “home” position at the end of Reset, without a DMX input signal.

1) Press OK, the current setting appears on the display.
2) Use the UP ▲ and DOWN ▼ keys to select one of the following settings:
   0%
   12.5%
   25%
   50% (default)
   75%
   87.5%
   100%
3) Press OK to confirm the selection or LEFT ◀ to keep the current setting.

SILENT MODE

It lets you select the “Silent Mode” from the two available.

1) Press OK the current setting appears on the display.
2) Use the UP ▲ and DOWN ▼ keys to select one of the following settings:
   Standard: Maximum speed and consequently maximum effects noise level.
   Quiet: reduces the speed of some effects (Pan/Tilt/Zoom/Zoom rotation), thereby reducing their noise level.
3) Press OK to confirm the selection or LEFT ◀ to keep the current setting.

Continue ➔

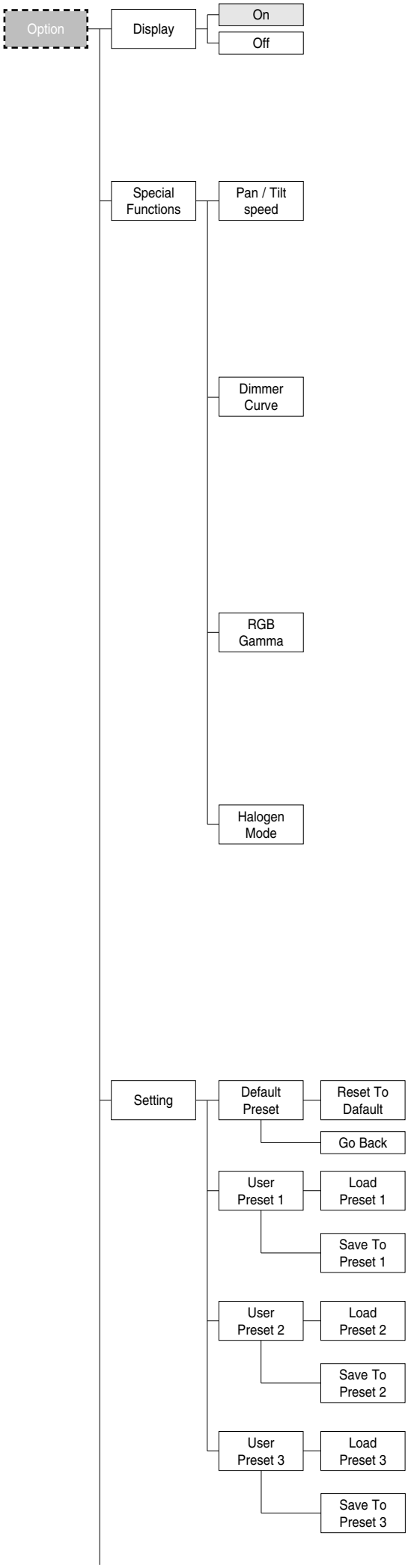

DISPLAY

Used for automatically reduce brightness on the display after about 30 seconds in idle.

1) Press OK - the current settings appear on the display (On or Off).
2) Use the UP ▲ and DOWN ▼ keys to enable (On) or disable (Off) the decreasing of display brightness.
3) Press OK to confirm the selection or LEFT ◀ to keep current settings.

SPECIAL FUNCTIONS

Pan / Tilt speed

Lets you select two different Pan and Tilt speeds.

1) Press OK - the current setting appears on the display.
2) Use the UP ▲ and DOWN ▼ keys to select one of the following settings:
   - Normal
   - Fast
3) Press OK to confirm the selection or LEFT ◀ to keep current settings.

Dimmer Curve

Lets you select four different Dimmer channel curves.

1) Press OK - the current setting appears on the display.
2) Use the UP ▲ and DOWN ▼ keys to select one of the following settings:
   - Curve 1
   - Curve 2
   - Curve 3
   - Curve 4
3) Press OK to confirm the selection or LEFT ◀ to keep current settings.

RGB Gamma

Lets you select three different RGBW gamma curves.

1) Press OK - the current setting appears on the display.
2) Use the UP ▲ and DOWN ▼ keys to select one of the following settings:
   - Gamma 1.0
   - Gamma 1.5
   - Gamma 2.0
3) Press OK to confirm the selection or LEFT ◀ to keep current settings.

Halogen Mode

Lets you select five different halogen lamp simulations.

1) Press OK - the current setting appears on the display.
2) Use the UP ▲ and DOWN ▼ keys to select one of the following settings:
   - Halogen OFF
   - Halogen Lamp 1 - 750 W
   - Halogen Lamp 2 - 1000 W
   - Halogen Lamp 3 - 1200 W
   - Halogen Lamp 4 - 2000 W
   - Halogen Lamp 5 - 2500 W
3) Press OK to confirm the selection or LEFT ◀ to keep current settings.

SETTING

Used to save 3 different settings of the items in the options menu and relative submenus.

1) Press OK - “Default preset” appears on the display.
2) Use the UP ▲ and DOWN ▼ keys to select one of the following configurations:
   - Default preset (*)
   - User preset 1
   - User preset 2
   - User Preset 3
3) Press OK - “Load preset X” appears on the display.
4) Use the UP ▲ and DOWN ▼ keys to select:
   - Load preset X to recall a previously stored configuration.
   - Save to preset X to store the current configuration.
   a confirmation message (Are you sure?) appears on the display.
5) Select YES to confirm the selection or NO to keep the current setting and return to the next higher level.

(*) DEFAULT PRESET

By pressing the RIGHT ▶ key and the LEFT ◀ key simultaneously once entered in the "main menu" it is possible to quickly (short cut) reset the default settings (DEFAULT PRESET).

Used for restoring default values on all options menu items and relevant submenus.

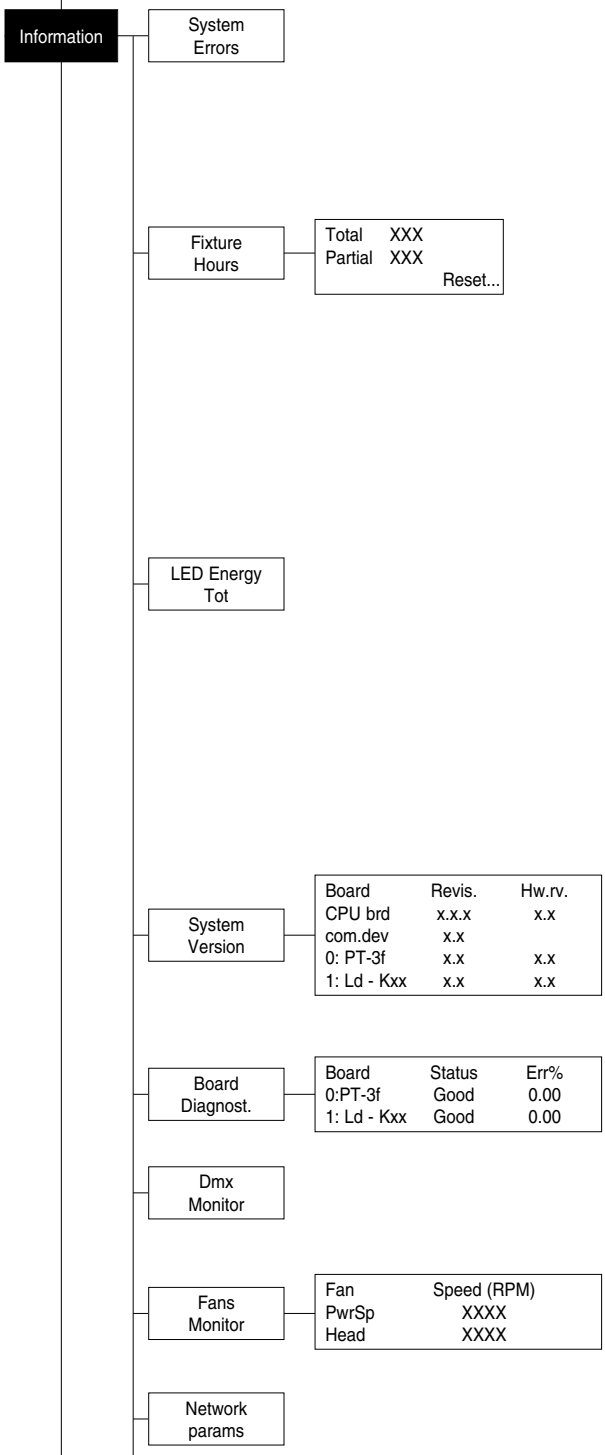

1) Press OK, a confirmation message (Are you sure?) appears on the display.
2) Select YES to confirm the selction or NO to keep current setting.

OPTION	DEFAULT
Invert Pan	Off
Invert Tilt	Off
Swap Pan-Tilt	Off
Encoder Pan-Tilt	On
P/T Homing Mode	Standard
Pan Home Def Pos	270 degrees
Tilt Home Def Pos	50%
Display	On
Silent Mode	Standard
P/T Speed	Fast
Dimmer Curve	Curve 1
RGB Gamma	Gamma 1.5
Halogen Mode	Halogen Off

INFORMATION MENU

SYSTEM ERRORS

Shows a list of warnings and messages relevant to errors occurred since the fixtures switching-on.

1) Pressing OK you are allowed to reset the SYSTEM ERRORS list. A confirmation message (Are you sure you want to clear error list ?) appears on the display.
2) Select YES to reset the list or NO to go back.

FIXTURE HOURS

Used for displaying projector operating hours (total and partial).

1) Press OK - Hours total and partial appears on the display.
   Total counter
   Counts the number of projector working life hours (from manufacture to date).
   Partial counter
   Counts the number of partial projector working life hours since the last reset to date.
2) Press OK to reset partial projector working hours a confirmation message (Are you sure?) appears on the display.
3) Select YES to reset partial projectors counter or NO to keep the current setting and return to the top menu level.

LED ENERGY TOT

Lets you view total LED working hours.

1) Press OK - to display total and partial Watts/hour:
   Total
   Total LED working hours from construction to date.
   Partial
   LED working hours from last reset to date.
2) Press OK to reset the partial counter. A confirmation appears on the screen (Are you sure?)
3) Select YES to reset the partial counter or NO to keep the current setting and open the next menu level.

SYSTEM VERSION

Used for displaying the software and hardware version of each board installed in the projector.
CPU brd (CPU board)
0: PT-3f (Scheda Pan / Tilt)
1: Ld - Kxx (Scheda LED)

BOARD DIAGNOSTIC

Used for displaying the status error of each board installed in the projector:
0: PT-3f (Scheda Pan / Tilt)
1: Ld - Kxx (Scheda LED)

DMX MONITOR

Used for displaying the projector DMX channel level in bit (Val) and in percentage (Perc).

FANS MONITOR

Used for displaying the speed of each fan installed in the projector:
PwrSp (fan PSU)
Head (fan head)

NETWORK PARAMS

Allows the "Network" parameters of the projector to be displayed or:
IP address: Internet Protocol address (two projectors must not have the same IP address)
IP mask: 255.0.0.0
Mac address: Media Access Control: the projector's Ethernet Address.

Continue ➔

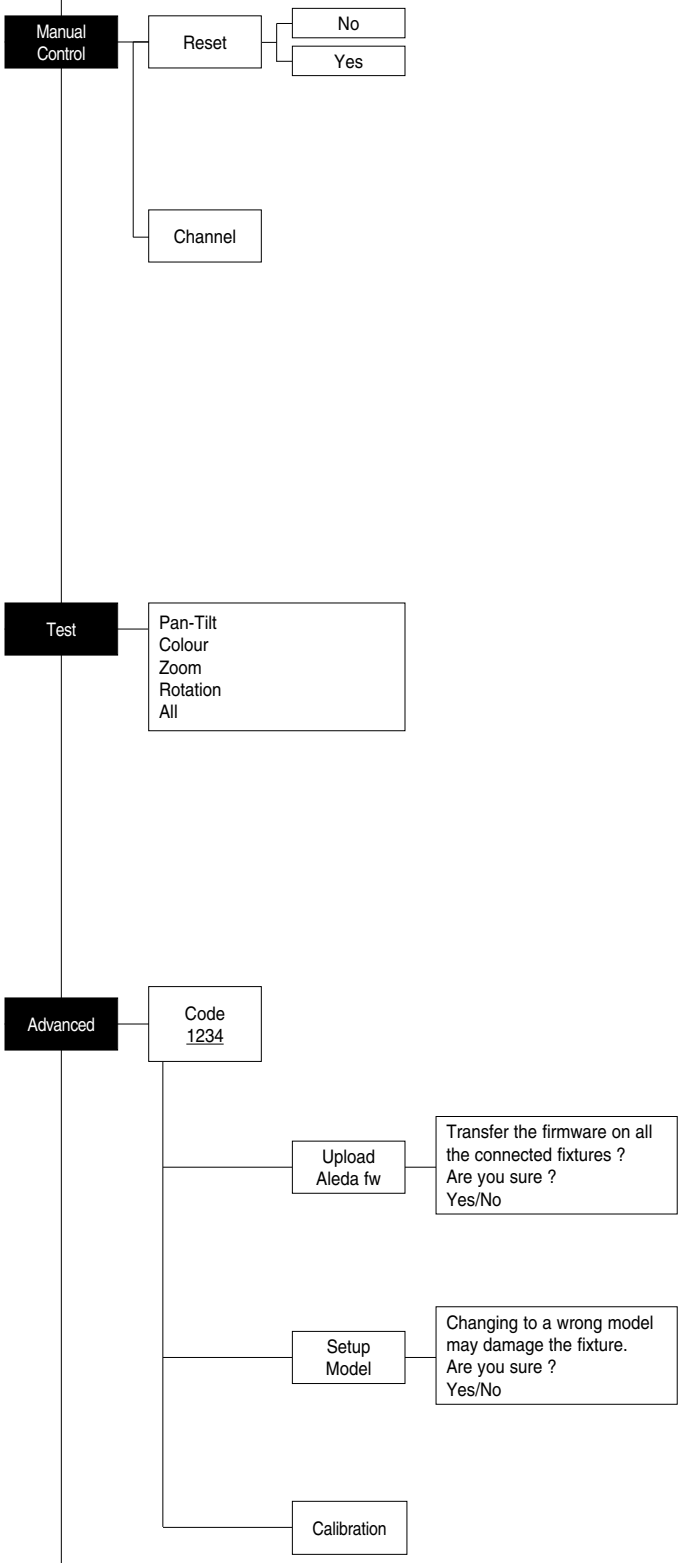

MANUAL CONTROL

RESET

Used for resetting the projector.

1) Press OK to reset the projectors, a confirmation message (Are you sure ?) appears on the display.
2) Select YES to starting reset the fixture or NO to keep the current setting and return to the top menu level.

CHANNEL

Used for setting channel levels from the projector control panel.

1) Press OK - the first channel appears on the display.
2) Use the UP and DOWN keys to select the required channel:
3) Press OK and use the UP and DOWN keys to select the required DMX level (value between 0 and 255).
4) Press LEFT to return to the top menu level.

TEST MENU

TEST

Allows you to check the proper functioning of effects.

1) Press OK to return to the top menu level.
2) Use the UP and DOWN keys to select the required test.
3) Press OK to confirm the selection or LEFT to keep current settings.

Test sequence:
Pan - Tilt effects (Pan & Tilt)
Colours
Zoom
Zoom rotation
All effects

ADVANCED MENU

To enable the "Advanced Menu" set up the "Access code" (1234) using the UP, DOWN, RIGHT keys.
Press OK - "Menu advanced" appears on the display

UP LOAD FIRMWARE

Allows you to transfer the firmware from 1 fixture to all the connected fixtures.

1) Press OK , a confirmation message appears on the display.
2) Select YES to start the firmware loading or NO to keep the current setting and return to the top menu level

SETUP MODEL

Allows you to change the default model of projector.

1) Press OK a confirmation message appears on the display.
2) Select YES to define the model of projector or NO to keep the current setting and return to the top menu level.

CALIBRATION

Allows you to adjust effects from the control panel to obtain perfect uniformity between the projectors.

1) Press OK - “channels” appears on the display.
2) Using the UP and DOWN keys, select the effect you wish to regulate.
3) Press OK and use the RIGHT, UP and DOWN buttons to make the adjustment by setting a value between 0 and 255.
4) Press OK to confirm the selection or LEFT to keep current settings and return to the top level.

FACTORY DEFAULT

Allows you to restore default values of all channels (128).

1) Press OK – a confirmation message appears on the display (Reset calibration to factory default ?).
2) Select YES to reset calibration to factory default or NO to keep the current setting and return to the top menu level.

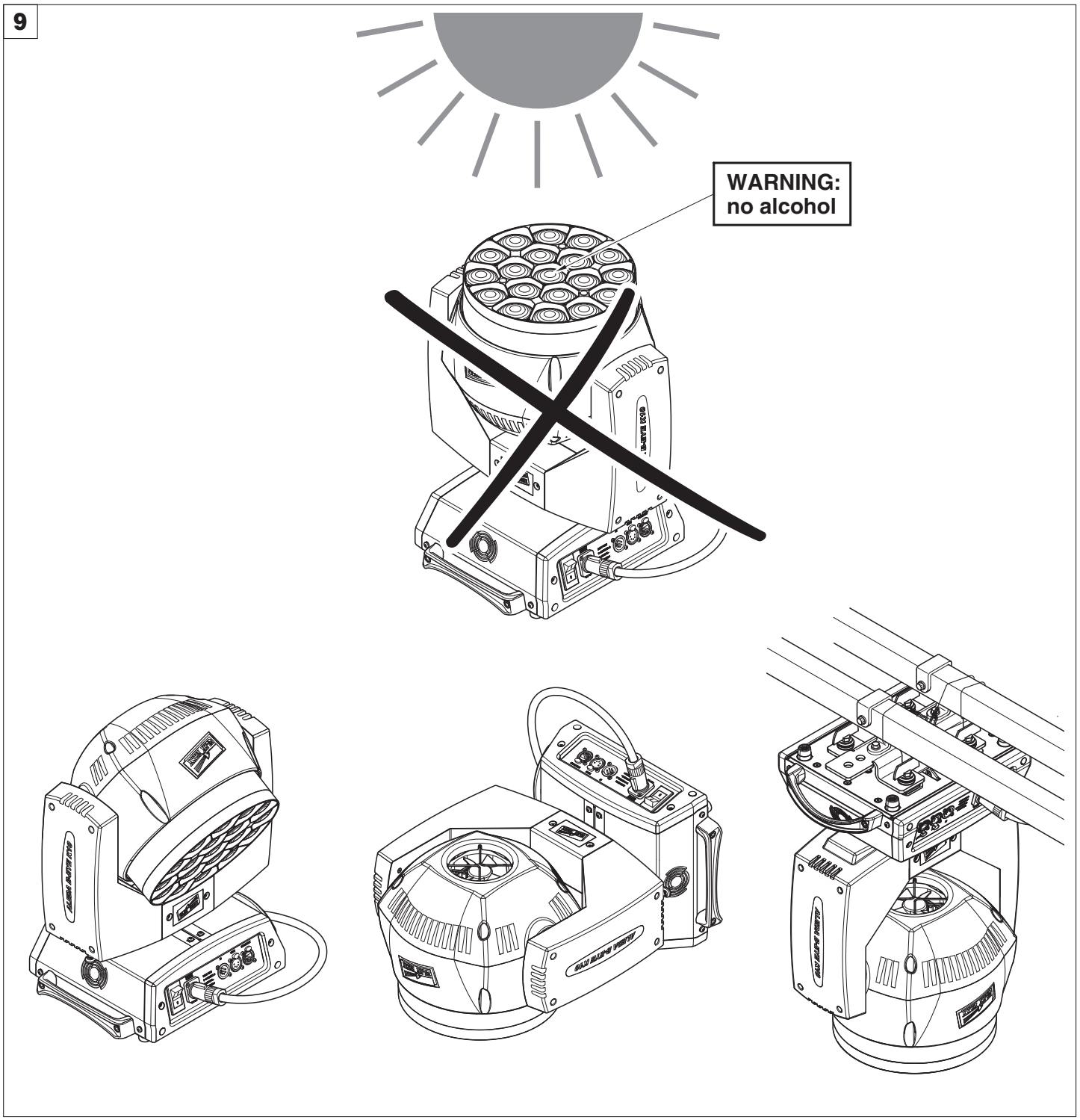

CAUTION:

- **Light collimation system**
  This product contains internal light collimation system. Avoid intense light from any angle.
  To avoid damage to the internal parts of the fixture when the fixture is not working, is recommended to turn the head down before turning the fixture off, so that the front lenses of the fixture are invested as little as possible from the sun or any intense light.
- **Set channel 20 (Zoom) to 255-bit before turning off the projector to facilitate the packaging of the projector.**
- To ensure optimal operation and performance for a long time it is essential to periodically clean the parts subject to dust and grease deposits. The frequency with which the following operations are to be carried out depends on various factors, such as the amount of the effects and the quality of the working environment (air humidity, presence of dust, salinity, etc.).
  It is recommended that the projector undergoes an annual service by a qualified technician for special maintenance involving at least the following operations:
  - General cleaning of internal parts.
  - Restoring lubrication of all parts subject to friction, using lubricants specifically supplied by Clay Paky.
  - General visual check of the internal components, cabling, mechanical parts, etc.
  - Electrical, photometric and functional checks; eventual repairs.

Cleaning the lenses

Only use neutral soap and water to clean the lenses, then dry it carefully with a soft, non-abrasive cloth. (WARNING: the use of alcohol or any other detergent could damage the lenses).

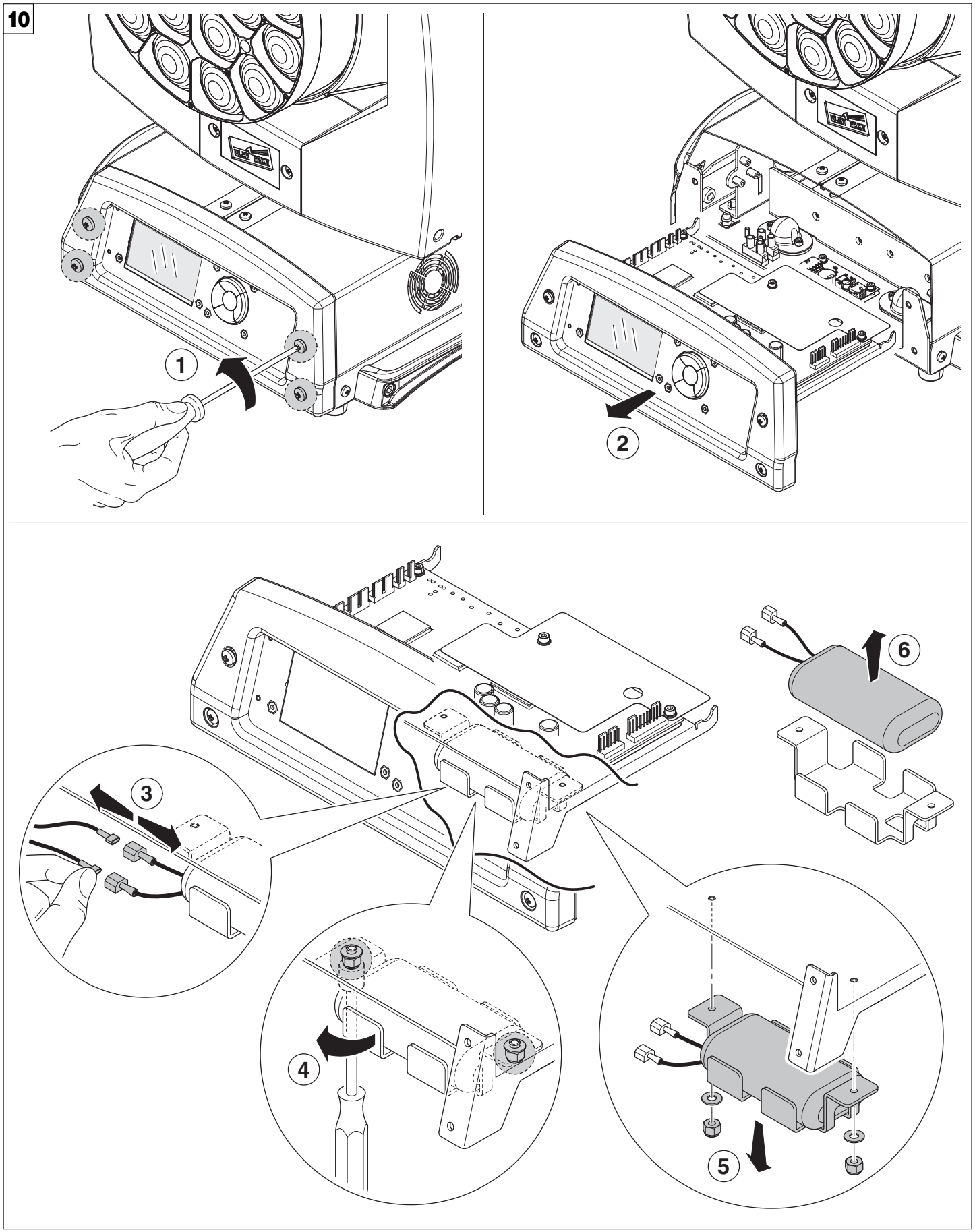

Battery removal - Fig. 10

LiFePO4
Pb

This product contains a rechargeable lead-acid or lithium iron tetraphosphate battery. To preserve the environment, please dispose the battery at the end of its life according to the regulation in force.

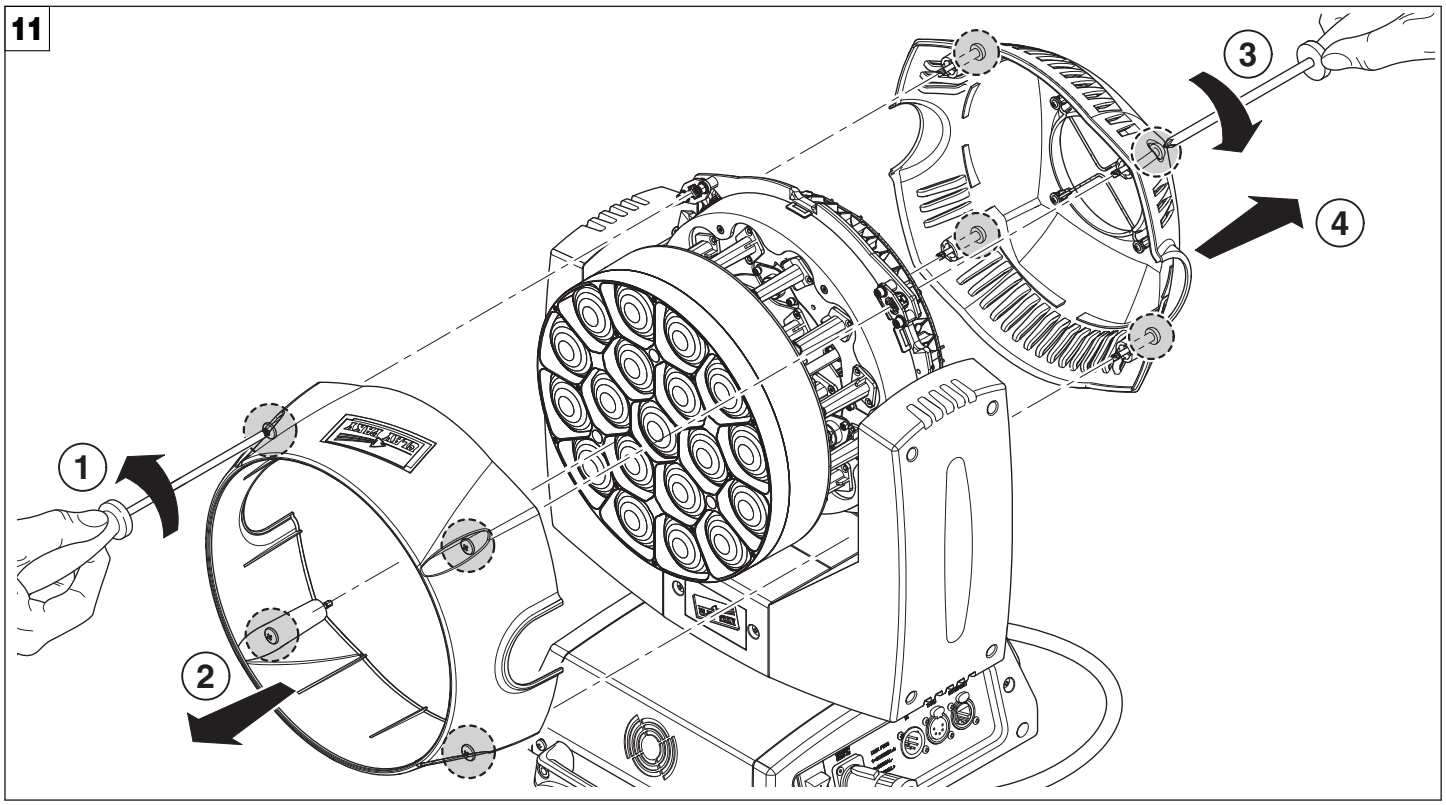

Opening the covers - Fig. 11

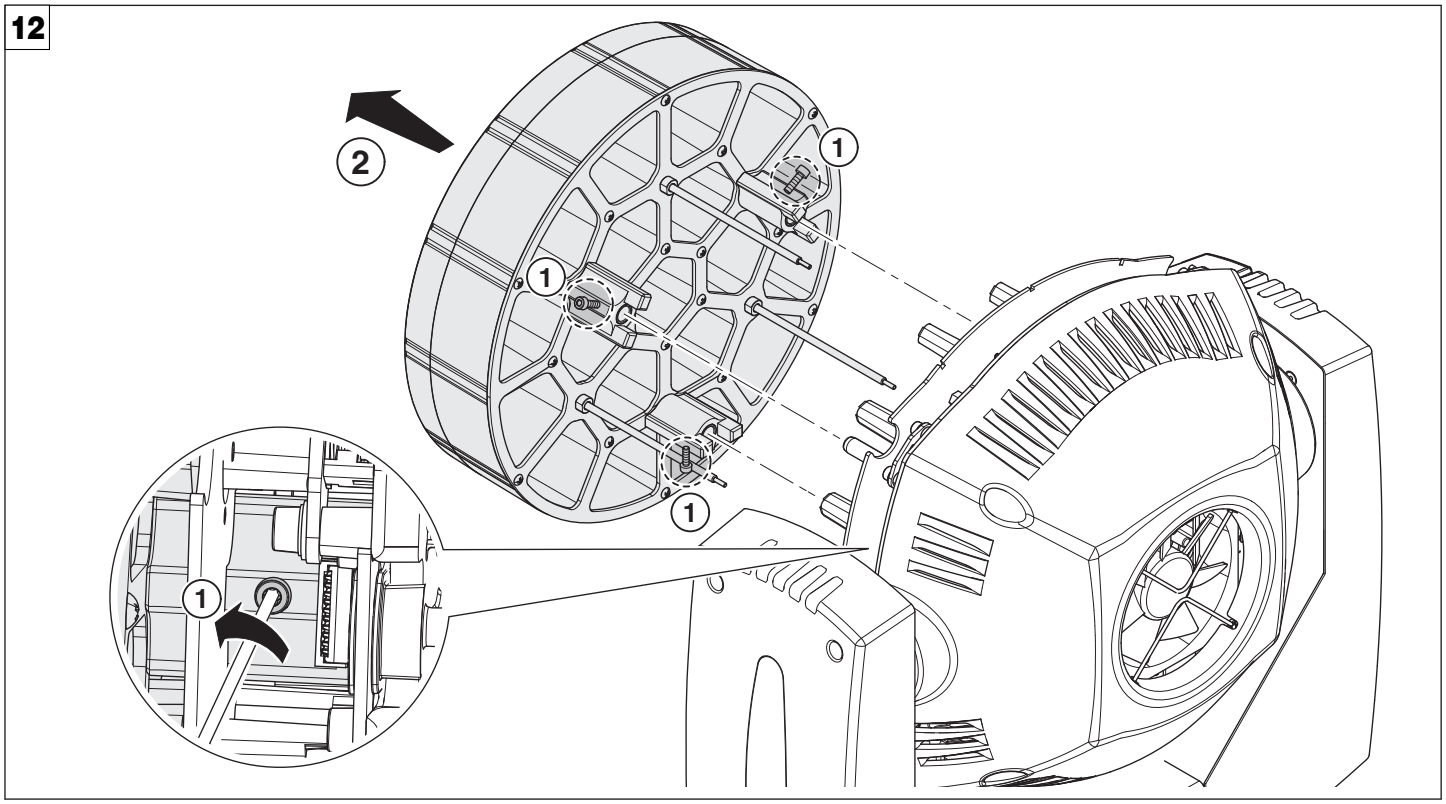

Removing/Assembling the lens unit - Fig. 12

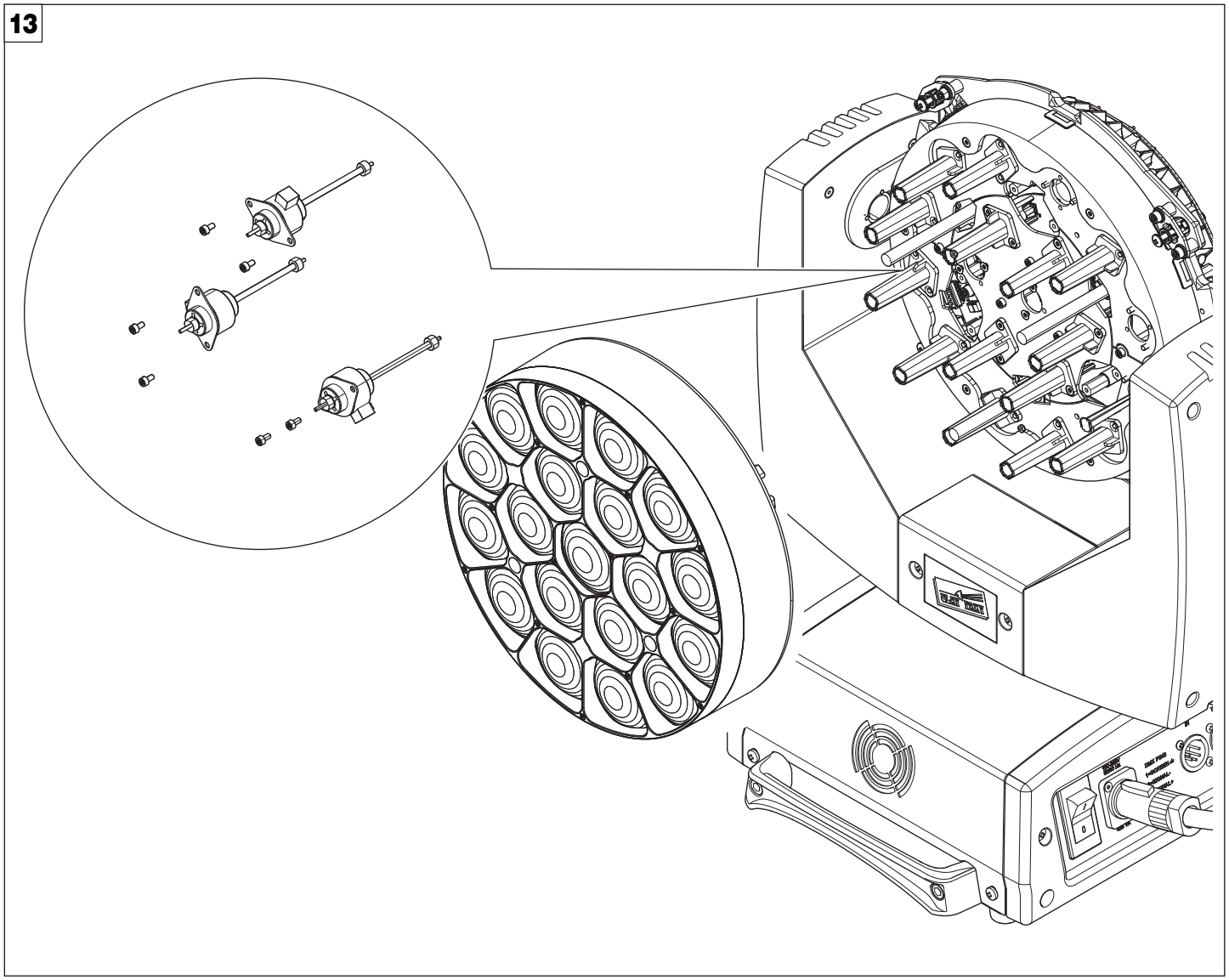

Replacing the line actuator - Fig. 13

CAUSE AND SOLUTION OF PROBLEMS

THE PROJECTOR WILL NOT SWITCH ON	ELECTRONICS NON-OPERATIONAL	DEFECTIVE PROJECTION	REDUCED LUMINOSITY	POSSIBLE CAUSES	CHECKS AND REMEDIES
					PROBLEMS
●				No mains supply.	Check the power supply voltage.
●			●	LED exhausted or defective.	Call an authorised technician.
	●			Signal transmission cable faulty or disconnected.	Replace the cables.
	●			Incorrect addressing.	Check addresses (see instructions).
	●			Fault in the electronic circuits.	Call an authorised technician.
		●		Lenses or reflector broken	Call an authorised technician.
		●	●	Dust or grease deposited.	Clean (see instructions).

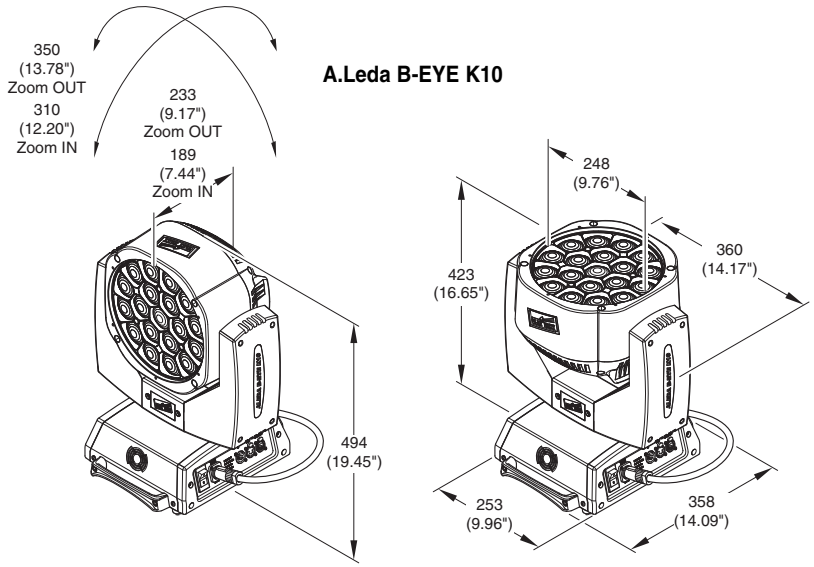

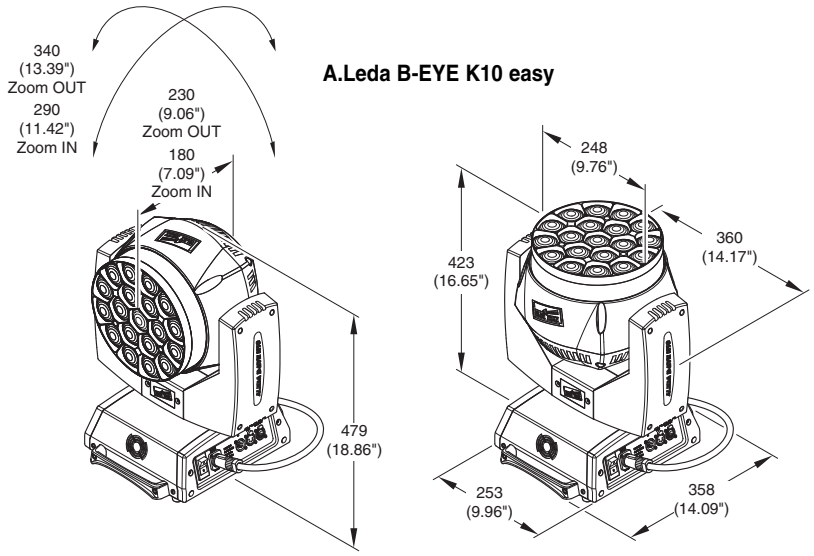

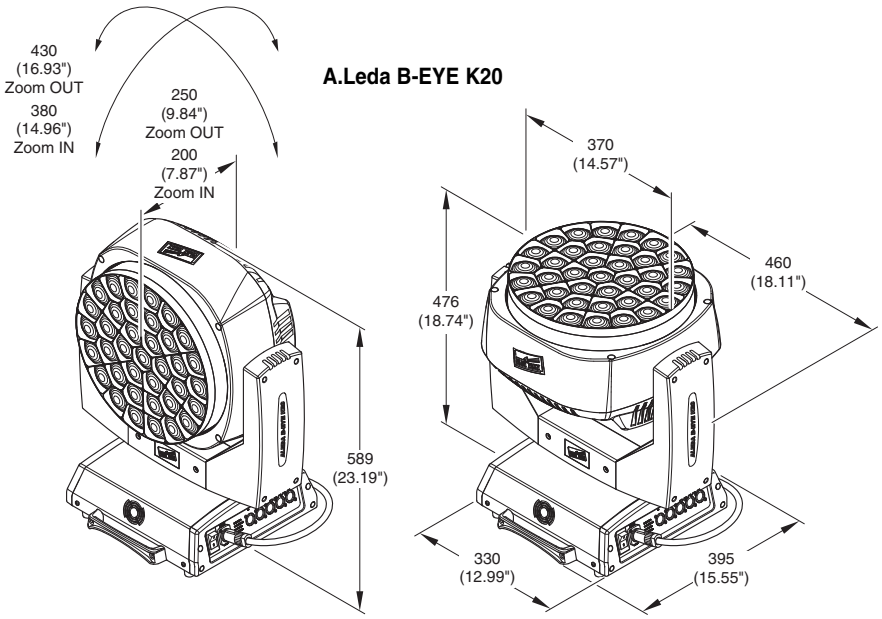

Power supplies available
100-240V 50/60Hz

Input power
- K20 - 750VA
- K10 - 450VA

Total output
B-EYE K10: t.b.d.
B-EYE K10 Easy: 4800 lumens
B-EYE K20: 9800 lumens

LED source
LED Osram Ostar RGBW - 15W
Average LED life: 50.000 h

Motors
5 (k10), 7 (k20) stepper motors, operating with microsteps, totally microprocessor controlled.

Cooling
- High efficiency die-cast aluminium
- Forced ventilation

Inputs
- DMX 512
- Ethernet

Working position
Functioning in any position.

Movable body
- Movement by means of two stepper motors, controlled by microprocessor.
- Automatic repositioning of PAN and TILT after accidental movement not controlled by control unit.
- Travel:
  - PAN = 540°
  - TILT = 210°

IP20 protection rating
- Protected against the entry of solid bodies larger than 12mm (0.47”).
- No protection against the entry of liquids.

CE Marking
Complies with the following European Directives
- 2006/95/EC (LVD)
- 2004/108/EC (EMC)
- 2011/65/EU (RoHS).

Weights
- K10: 14.5 kg
- K20: 21 kg

A.LEDA B-EYE K10 EASY

STANDARD

CHAN-NEL	CHANNEL MODE
1	Red
2	Red fine
3	Green
4	Green fine
5	Blue
6	Blue fine
7	White
8	White fine
9	Linear CTO
10	Macro colour
11	Strobe
12	Dimmer
13	Dimmer Fine
14	Pan
15	Pan Fine
16	Tilt
17	Tilt Fine
18	Function
19	Reset
20	Zoom

SHAPES

CHAN-NEL	CHANNEL MODE
1	Red
2	Red fine
3	Green
4	Green fine
5	Blue
6	Blue fine
7	White
8	White fine
9	Linear CTO
10	Macro colour
11	Strobe
12	Dimmer
13	Dimmer Fine
14	Pan
15	Pan Fine
16	Tilt
17	Tilt Fine
18	Function
19	Reset
20	Zoom
21	Shape Selection
22	Shape Speed
23	Shape Fade
24	Shape R
25	Shape G
26	Shape B
27	Shape W
28	Shape Dimmer
29	Background Dimmer
30	Shape Transition
31	Shape Offset
32	Foreground Strobe
33	Background Strobe
34	Background Select

EXTENDED

CHAN-NEL	CHANNEL MODE
1	Red
2	Red fine
3	Green
4	Green fine
5	Blue
6	Blue fine
7	White
8	White fine
9	Linear CTO
10	Macro colour
11	Strobe
12	Dimmer
13	Dimmer Fine
14	Pan
15	Pan Fine
16	Tilt
17	Tilt Fine
18	Function
19	Reset
20	Zoom
21	Red LED 1
22	Green LED 1
23	Blue LED 1
…	Red LED …
…	Green LED …
…	Blue LED …
75	Red LED 19
76	Green LED 19
77	Blue LED 19

EXTENDED RGBW

CHAN-NEL	CHANNEL MODE
1	Red
2	Red fine
3	Green
4	Green fine
5	Blue
6	Blue fine
7	White
8	White fine
9	Linear CTO
10	Macro colour
11	Strobe
12	Dimmer
13	Dimmer Fine
14	Pan
15	Pan Fine
16	Tilt
17	Tilt Fine
18	Function
19	Reset
20	Zoom
21	Red LED 1
22	Green LED 1
23	Blue LED 1
24	White LED 1
…	Red LED …
…	Green LED …
…	Blue LED …
…	White LED …
93	Red LED 19
94	Green LED 19
95	Blue LED 19
96	White LED 19

FULL

CHAN-NEL	CHANNEL MODE
1	Red
2	Red fine
3	Green
4	Green fine
5	Blue
6	Blue fine
7	White
8	White fine
9	Linear CTO
10	Macro colour
11	Strobe
12	Dimmer
13	Dimmer Fine
14	Pan
15	Pan Fine
16	Tilt
17	Tilt Fine
18	Function
19	Reset
20	Zoom
21	Shape Selection
22	Shape Speed
23	Shape Fade
24	Shape R
25	Shape G
26	Shape B
27	Shape W
28	Shape Dimmer
29	Background Dimmer
30	Shape Transition
31	Shape Offset
32	Foreground Strobe
33	Background Strobe
34	Background Select
35	Red LED 1
36	Green LED 1
37	Blue LED 1
…	Red LED …
…	Green LED …
…	Blue LED …
89	Red LED 19
90	Green LED 19
91	Blue LED 19

A.LEDA B-EYE K10

STANDARD

CHAN-NEL	CHANNEL MODE
1	Red
2	Red fine
3	Green
4	Green fine
5	Blue
6	Blue fine
7	White
8	White fine
9	Linear CTO
10	Macro colour
11	Strobe
12	Dimmer
13	Dimmer Fine
14	Pan
15	Pan Fine
16	Tilt
17	Tilt Fine
18	Function
19	Reset
20	Zoom
21	Zoom Rotation

SHAPES

CHAN-NEL	CHANNEL MODE
1	Red
2	Red fine
3	Green
4	Green fine
5	Blue
6	Blue fine
7	White
8	White fine
9	Linear CTO
10	Macro colour
11	Strobe
12	Dimmer
13	Dimmer Fine
14	Pan
15	Pan Fine
16	Tilt
17	Tilt Fine
18	Function
19	Reset
20	Zoom
21	Zoom Rotation
22	Shape Selection
23	Shape Speed
24	Shape Fade
25	Shape R
26	Shape G
27	Shape B
28	Shape W
29	Shape Dimmer
30	Background Dimmer
31	Shape Transition
32	Shape Offset
33	Foreground Strobe
34	Background Strobe
35	Background Select

EXTENDED

CHAN-NEL	CHANNEL MODE
1	Red
2	Red fine
3	Green
4	Green fine
5	Blue
6	Blue fine
7	White
8	White fine
9	Linear CTO
10	Macro colour
11	Strobe
12	Dimmer
13	Dimmer Fine
14	Pan
15	Pan Fine
16	Tilt
17	Tilt Fine
18	Function
19	Reset
20	Zoom
21	Zoom Rotation
22	Red LED 1
23	Green LED 1
24	Blue LED 1
…	Red LED …
…	Green LED …
…	Blue LED …
76	Red LED 19
77	Green LED 19
78	Blue LED 19

EXTENDED RGBW

CHAN-NEL	CHANNEL MODE
1	Red
2	Red fine
3	Green
4	Green fine
5	Blue
6	Blue fine
7	White
8	White fine
9	Linear CTO
10	Macro colour
11	Strobe
12	Dimmer
13	Dimmer Fine
14	Pan
15	Pan Fine
16	Tilt
17	Tilt Fine
18	Function
19	Reset
20	Zoom
21	Zoom Rotation
22	Red LED 1
23	Green LED 1
24	Blue LED 1
25	White LED 1
…	Red LED …
…	Green LED …
…	Blue LED …
…	White LED …
90	Red LED 18
91	Green LED 18
92	Blue LED 18
93	White LED 18
94	Red LED 19
95	Green LED 19
96	Blue LED 19

FULL

CHAN-NEL	CHANNEL MODE
1	Red
2	Red fine
3	Green
4	Green fine
5	Blue
6	Blue fine
7	White
8	White fine
9	Linear CTO
10	Macro colour
11	Strobe
12	Dimmer
13	Dimmer Fine
14	Pan
15	Pan Fine
16	Tilt
17	Tilt Fine
18	Function
19	Reset
20	Zoom
21	Zoom Rotation
22	Shape Selection
23	Shape Speed
24	Shape Fade
25	Shape R
26	Shape G
27	Shape B
28	Shape W
29	Shape Dimmer
30	Background Dimmer
31	Shape Transition
32	Shape Offset
33	Foreground Strobe
34	Background Strobe
35	Background Select
36	Red LED 1
37	Green LED 1
38	Blue LED 1
…	Red LED …
…	Green LED …
…	Blue LED …
90	Red LED 19
91	Green LED 19
92	Blue LED 19

Continue ➔

A.LEDA B-EYE K20

STANDARD

CHAN-NEL	CHANNEL MODE
1	Red
2	Red fine
3	Green
4	Green fine
5	Blue
6	Blue fine
7	White
8	White fine
9	Linear CTO
10	Macro colour
11	Strobe
12	Dimmer
13	Dimmer Fine
14	Pan
15	Pan Fine
16	Tilt
17	Tilt Fine
18	Function
19	Reset
20	Zoom
21	Zoom Rotation

SHAPES

CHAN-NEL	CHANNEL MODE
1	Red
2	Red fine
3	Green
4	Green fine
5	Blue
6	Blue fine
7	White
8	White fine
9	Linear CTO
10	Macro colour
11	Strobe
12	Dimmer
13	Dimmer Fine
14	Pan
15	Pan Fine
16	Tilt
17	Tilt Fine
18	Function
19	Reset
20	Zoom
21	Zoom Rotation
22	Shape Selection
23	Shape Speed
24	Shape Fade
25	Shape R
26	Shape G
27	Shape B
28	Shape W
29	Shape Dimmer
30	Background Dimmer
31	Shape Transition
32	Shape Offset
33	Foreground Strobe
34	Background Strobe
35	Background Select

EXTENDED

CHAN-NEL	CHANNEL MODE
1	Red
2	Red fine
3	Green
4	Green fine
5	Blue
6	Blue fine
7	White
8	White fine
9	Linear CTO
10	Macro colour
11	Strobe
12	Dimmer
13	Dimmer Fine
14	Pan
15	Pan Fine
16	Tilt
17	Tilt Fine
18	Function
19	Reset
20	Zoom
21	Zoom Rotation
22	Red LED 1
23	Green LED 1
24	Blue LED 1
…	Red LED …
…	Green LED …
…	Blue LED …
130	Red LED 37
131	Green LED 37
132	Blue LED 37

EXTENDED RGBW

CHAN-NEL	CHANNEL MODE
1	Red
2	Red fine
3	Green
4	Green fine
5	Blue
6	Blue fine
7	White
8	White fine
9	Linear CTO
10	Macro colour
11	Strobe
12	Dimmer
13	Dimmer Fine
14	Pan
15	Pan Fine
16	Tilt
17	Tilt Fine
18	Function
19	Reset
20	Zoom
21	Zoom Rotation
22	Red LED 1
23	Green LED 1
24	Blue LED 1
25	White LED 1
…	Red LED …
…	Green LED …
…	Blue LED …
…	White LED …
166	Red LED 37
167	Green LED 37
168	Blue LED 37
169	White LED 37

FULL

CHAN-NEL	CHANNEL MODE
1	Red
2	Red fine
3	Green
4	Green fine
5	Blue
6	Blue fine
7	White
8	White fine
9	Linear CTO
10	Macro colour
11	Strobe
12	Dimmer
13	Dimmer Fine
14	Pan
15	Pan Fine
16	Tilt
17	Tilt Fine
18	Function
19	Reset
20	Zoom
21	Zoom Rotation
22	Shape Selection
23	Shape Speed
24	Shape Fade
25	Shape R
26	Shape G
27	Shape B
28	Shape W
29	Shape Dimmer
30	Background Dimmer
31	Shape Transition
32	Shape Offset
33	Foreground Strobe
34	Background Strobe
35	Background Select
36	Red LED 1
37	Green LED 1
38	Blue LED 1
…	Red LED …
…	Green LED …
…	Blue LED …
144	Red LED 37
145	Green LED 37
146	Blue LED 37

NOTE: On conclusion of resetting in case of absence of DMX signal, Pan & Tilt move to the "Home" position (Pan 128 bit - Tilt 128 bit) all the others channels stay at 0 bit.

- **RED**
  GREEN
  BLUE
  WHITE

BIT	EFFECT
255	LED ON
0	LED OFF

- **RED FINE**
  GREEN FINE
  BLUE FINE
  WHITE FINE

BIT	EFFECT
255	UP
0	LOW

- **LINEAR CTO**

BIT	EFFECT
255	2500 K
...	...
224	3200 K
...	...
188	4000 K
...	...
144	5000 K
...	...
117	5600 K
...	...
99	6000 K
...	...
54	7000 K
...	...
10	8000 K
0-9	UNUSED RANGE

Note: If CTO channel is active, the WHITE channel is disabled.

- **MACRO COLOUR**

BIT	LEE REFERENCE	COLOUR	BIT VALUE			
			R	G	B	W
209-255	-	White	255	235	66	255
208	-	Dirty White	255	255	122	255
207	197	Alice Blue	128	255	143	0
191-206	181	Congo Blue	77	0	255	0
184-190	174	Dark Steel Blue	181	255	95	0
180-183	170	Deep lavender	255	168	64	0
179	169	Lilac Tint	255	199	49	0
175-178	165	Daylight Blue	82	214	90	0
174	164	Flame Red	255	46	2	0
172-173	162	Bastard Amber	255	181	28	0
168-171	158	Deep Orange	222	84	0	0
162-167	152	Pale Gold	253	171	26	0
157-161	147	Apricot	255	143	13	0
151-156	141	Bright Blue	0	255	87	0
149-150	139	Primary Green	77	255	0	0
147-148	137	Special lavender	219	197	79	0
146	136	Pale Lavender	255	197	61	0
145	135	Deep Golden Amber	255	58	0	0
142-144	132	Medium Blue	0	255	143	0
138-141	128	Bright Pink	255	53	36	0
136-137	126	Mauve	227	41	56	0
134-135	124	Dark Green	84	255	13	0
131-133	121	Leaf Green	206	255	0	0
129-130	119	Dark Blue	0	186	255	0
128	118	Light Blue	74	255	82	0
127	117	Steel Blue	206	255	56	0
126	116	Med Blu Green	206	255	56	0
125	115	Peacock Blue	51	255	51	0
123-124	113	Magenta	255	20	15	0
121-122	111	Dark Pink	255	109	33	0
120	110	Middle Rose	217	130	28	0
119	109	Light Salmon	255	138	31	0
118	108	English Rose	255	148	23	0
117	107	Light Rose	255	141	31	0
115-116	105	Orange	255	122	0	0
114	104	Deep Amber	255	166	0	0
113	103	Straw	230	160	0	69
112	102	Light Amber	237	163	0	0
110-111	100	Spring Yellow	245	202	0	0
100-109	90	Dark yellow green	41	219	0	0
89-99	79	Just Blue	0	194	130	0
78-88	68	Sky Blue	0	255	135	0
68-77	58	Lavender	243	117	133	199
62-67	52	Light Lavender	243	117	39	197
49-61	39	Pink Carnation	255	107	0	130
46-48	36	Medium Pink	255	87	0	107
45	35	Light Pink	255	112	0	141
35-44	25	Sunrise Red	255	83	2	0
32-34	22	Dark Amber	255	65	0	0
31	21	Gold Amber	255	100	0	0
30	20	Medium Amber	255	135	0	0
29	19	Fire	255	56	0	0
27-28	17	Surprise Peach	198	114	9	0
23-26	13	Straw Tint	152	115	9	0
20-22	10	Medium Yellow	156	126	0	0
19	-	Black	0	0	0	0
18	-	White 5000 K	255	137	0	193
17	-	White 3700 K	255	201	25	255
16	-	White 7000 K	216	237	61	255
15	-	Magenta	255	0	255	0
14	-	Yellow	255	255	0	0
13	-	Cyan	0	255	255	0
12	-	Blue	0	0	255	0
11	-	Green	0	255	0	0
10	-	Red	255	0	0	0
0-9	-	Macro color OFF	-	-	-	-

Continue ➔

• STOP STROBE - FOREGROUND STROBE - BACKGROUND STROBE

BIT	EFFECT
252 - 255	OPEN
239 - 251	RANDOM FAST STROBE
226 - 238	RANDOM MEDIUM STROBE
213 - 225	RANDOM SLOW STROBE
208 - 212	OPEN
207	FAST PULSATION (25 flash/sec)
108	SLOW PULSATION (0,5 flash/sec)
104 - 107	OPEN
103	FAST STROBE (25 flash/sec)
4	SLOW STROBE (1 flash/sec)
0 - 3	CLOSED

• DIMMER

BIT	EFFECT
255	FULL LIGHT
0	NO LIGHT

• DIMMER FINE

BIT	EFFECT
255	UP
0	LOW

• PAN

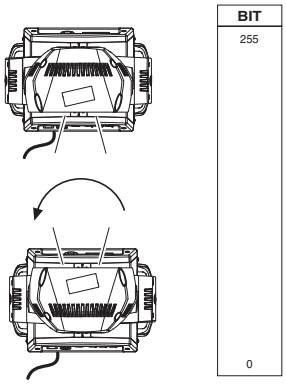

• PAN FINE

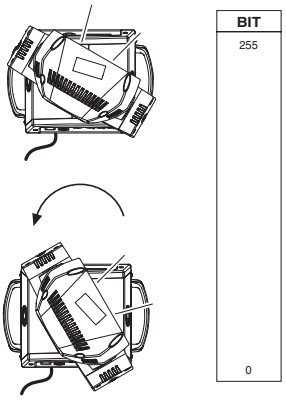

Operation with option InvertPan ⇕ Off
(Tilt conventionally represented at 35 bit and option Invert Tilt ⇕ Off)

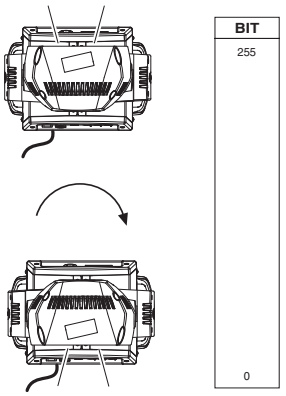

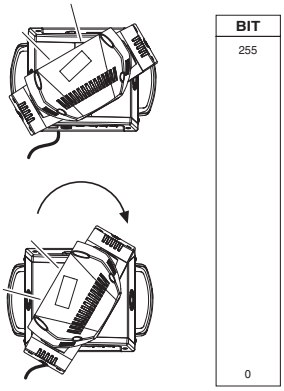

Operation with option InvertPan ⇕ On
(Tilt conventionally represented at 35 bit and option Invert Tilt ⇕ Off)

• TILT

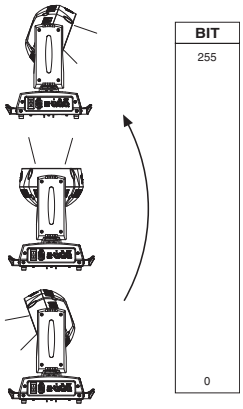

• TILT FINE

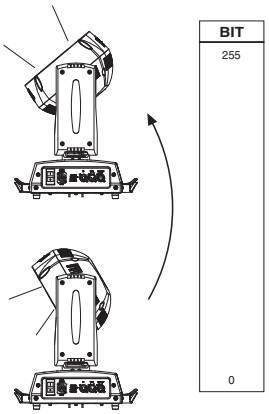

Operation with option InvertPan ⇕ Off
(Tilt conventionally represented at 35 bit and option Invert Tilt ⇕ Off)

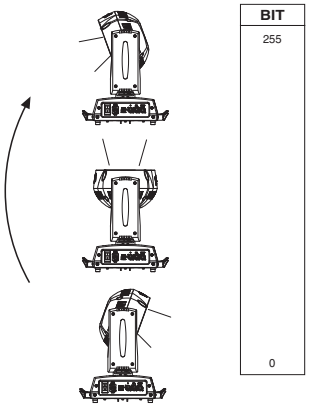

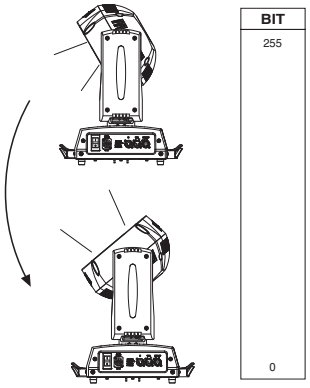

Operation with option InvertPan ⇕ On
(Tilt conventionally represented at 35 bit and option Invert Tilt ⇕ Off)

• FUNCTION

BIT	EFFECT	
103 – 255	Reserved	
98 – 102	Halogen Lamp Simulation, type 5 (2500 W)	Linear CTO @ 0 bit
93 – 97	Halogen Lamp Simulation, type 4 (2000 W)	Linear CTO @ 0 bit
88 – 92	Halogen Lamp Simulation, type 3 (1200 W)	Linear CTO @ 0 bit
83 – 87	Halogen Lamp Simulation, type 2 (1000 W)	Linear CTO @ 0 bit
78 – 82	Halogen Lamp Simulation, type 1 (750W)	Linear CTO @ 0 bit
73 – 77	Halogen Lamp Simulation OFF (Default)	
68 – 72	RGBW Gamma curve 3 – gamma = 2.0	
63 – 67	RGBW Gamma curve 2 – gamma = 1.5	
58 – 62	RGBW Gamma curve 1 – gamma = 1.0	
52 – 57	Dimmer Curve 4	
48 – 52	Dimmer Curve 3	
43 – 47	Dimmer Curve 2	
38 – 42	Dimmer Curve 1	
24 – 37	Pan Tilt Normal	
12 – 24	Pan Tilt Fast (Default)	
0 – 11	Function off – rearmed	

The functions are actived passing through the “unused range” and staying 5 seconds in necessary level.
Last selected function still active. Enable setting a new function.

DIMMER CURVE 1 - GAMMA 1 LINEAR

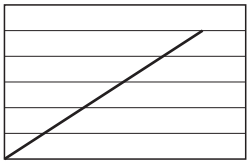

DIMMER CURVE 3 - GAMMA 2,0

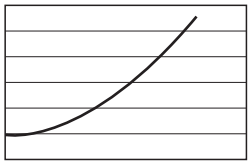

DIMMER CURVE 2 - GAMMA 1,5

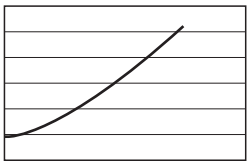

DIMMER CURVE 4 - S

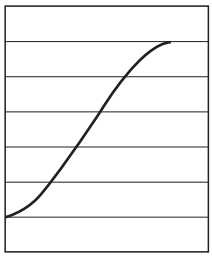

• RESET

BIT	EFFECT
255	COMPLETE RESET
	Complete reset is activated passing throug the unused range and staying 5 seconds in complete reset levels
128	COMPLETE RESET
127	PAN / TILT RESET
	Pan / Tilt reset is activated passing throug the unused range and staying 5 seconds in Pan / Tilt reset levels
77	PAN / TILT RESET
76	ZOOM RESET
	Effects reset is activated passing throug the unused range and staying 5 seconds in Effects reset levels.
26	ZOOM RESET
25	
0	UNUSED RANGE

• ZOOM

BIT	EFFECT
255	WIDE BEAM
0	NARROW BEAM

• ZOOM ROTATION

BIT	EFFECT
255	FAST ROTATION
193	SLOW ROTATION
191 - 192	STOP
190	SLOW ROTATION
128	FAST ROTATION
127	
	LINEAR ROTATION
0	

• ZOOM ROTATION (available on zoom channel from 0 bit to 42 bit)

BIT	MACRO EFFECT
193-255	CCW Rotation, speed from 3 RPH to 10 RPM
191-192	Stop rotation
128-190	CW Rotation, speed from 10 RPM to 3 RPH
127	Indexed zone. Lens angle = 60.00
126	Indexed zone. Lens angle = 59.52
….	
3	Indexed zone. Lens angle = 1.42
2	Indexed zone. Lens angle = 0.94
1	Indexed zone. Lens angle = 0.47
0	Indexed zone. Lens angle = 0

• ZOOM ROTATION (available on zoom channel at 255 bit only)

BIT	MACRO EFFECT
128-255	Lens offset angle: 0.00 degree
127	Lens offset angle: +4.00 degree
126	Lens offset angle: +3.94 degree
125	Lens offset angle: +3.87 degree
…	
1	Lens offset angle: +0.06 degree
0	Lens offset angle: 0.00 degree

• RED LED 1 to…
GREEN LED 1 to…
BLUE LED 1 to…
WHITE LED 1 to…

BIT	EFFECT
255	LED ON
0	LED OFF

Continue ➔

SHAPE SPEED - SHAPE OFFSET - SHAPE FADE - BACKGROUND SELECT

Shape Selection	Shape Slot	Macro Name	On K10	On K20	Description	Random colors *1	SHAPE SPEED	SHAPE OFFSET	SHAPE FADE	BACKGROUND SELECT (*3)(*4)
0-7		Macro OFF	**Yes**	**Yes**		N.a.	N.a.	N.a.	N.a.	N.a.
8	1	Pixel 1	**Yes**	**Yes**	Static effects. The ring or rings used by the macro are turned-on with the foreground colour.	N.a.	N.a.	N.a.	0 = Snap effect 1-255 = Fade effect	For K10: 0-7 = wash 8-15 = Bkgnd rings selection 16-255 = wash For K20: 0-7 = wash 8-23 = Bkgnd rings
9	2	Ring 1	**Yes**	**Yes**						
10	3	Ring 2	**Yes**	**Yes**						
11	4	Ring 3	**No**	**Yes**						
12	5	Pixel 1+Ring 1	**Yes**	**Yes**						
13	6	Pixel 1+Ring 2	**Yes**	**Yes**						
14	7	Pixel 1+Ring 3	**No**	**Yes**						
15	8	Single ring (Ramp -/+)	**Yes**	**Yes**		**Yes**	0-63 = Radius size, static. 64-158 = max to min speed, Closing effect 159-160 = STOP 161-255 = min to max speed, Opening effect	0-9 → continuous 10-255 → random distribution of flash from 2 to 20 fixtures	0 = Snap effect 1-255 = Fade effect	For K10: 0-7 = wash 8-15 = Bkgnd rings selection 16-255 = wash For K20: 0-7 = wash 8-23 = Bkgnd rings selection 24-255 = wash
16	9	Filled rings (ramp -/+)	**Yes**	**Yes**		**Yes**				
17	10	Open/Close 1	**Yes**	**Yes**		**Yes**	0-63 = Radius size, static. 64-158 = max to min speed, Closing effect 159-160 = STOP 161-255 = min to max speed, Opening effect			
18	11	Open/Close 2	**Yes**	**Yes**		**Yes**				
19	12	Random pixels 1	**Yes**	**Yes**		**Yes**	0-63 = STOP 64-158 = max to min speed, Instant-on + fadeout. 159-160 = STOP. 161-255 = min to max speed, FadeIn + FadeOut.	0-255 → select random distribution from 2 up to 20 fixtures	0 = Snap effect 1-255 = Fade effect	For K10: 0-7 = wash 8-15 = Bkgnd rings selection 16-254 = wash For K20: 0-7 = wash 8-23 = Bkgnd rings selection 24-254 = wash All Fixtures: 255 = Mirror Effect
20	13	Random pixels 2	**Yes**	**Yes**		**Yes**		0-255 → select pixel density		
21	14	Rainbow 1 (Variable speed)	**Yes**	**Yes**		N.a.	0-63 = Angle 0-360°, static. 64-158 = max to min speed, c.cw rotation 159-160 = STOP 161-255 = min to max speed, cw rotation	0-255 → angle offset from 0 to 360°	0 = Snap effect 1-255 = Fade effect	For K10: 0-7 = wash 8-15 = Bkgnd rings selection 16-255 = wash For K20: 0-7 = wash 8-23 = Bkgnd rings selection
22	15	Rainbow 2 (Fixed speed withvariable color offset)	**Yes**	**Yes**		N.a.	0-63 = STOP 64-158 = c.cw rotation 159-160 = STOP 161-255 = cw rotation The value 64-158 or 161-255 change the rainbow angle offset (the orange starting angle).	N.a.	0 = Snap effect 1-255 = Fade effect	For K10: 0-7 = wash 8-15 = Bkgnd rings selection 16-255 = wash For K20: 0-7 = wash 8-23 = Bkgnd rings selection 24-255 = wash
23	16	Fan	**Yes**	**Yes**		N.a.	0-63 = angle offset, 0-360° 64-158 = max to min speed, c.cw rotation 159-160 = STOP 161-255 = min to max speed, cw rotationt	0-255 → angle offset from 0 to 360°	0 = Snap effect 1-255 = Fade effect	For K10: 0-7 = wash 8-15 = Bkgnd rings selection 16-255 = wash For K20: 0-7 = wash 8-23 = Bkgnd rings selection 24-255 = wash For all fixtures: - Macro 25, 26 255 = Mirror Effect with bkgnd color - Macro 27, 28, 29 255 = Show Alternative Color
24	17	Bar 1	**Yes**	**Yes**						
25	18	Half moon	**Yes**	**Yes**						
26	19	Triangle	**Yes**	**Yes**						
27	20	Segment 1	**Yes**	**Yes**						
28	21	Arc 1	**Yes**	**Yes**						
29	22	Arc 2	**Yes**	**Yes**						

Shape Selection	Shape Slot	Macro Name	On K10	On K20	Description	Random colors *1	SHAPE SPEED	SHAPE OFFSET	SHAPE FADE	BACKGROUND SELECT (*3)(*4)
30	23	Bar 2 (Variable size)	**Yes**	**Yes**		N.a.	0-63 = STOP, indexed speed 64-158 = max to min speed, c.cw rotation. 159-160 = STOP. 161-255 = min to max speed cc rotation.	0-255 → select shape width	0 = Snap effect 1-255 = Fade effect	For K10: 0-7 = wash 8-15 = Bkgnd rings selection 16-254 = wash 255 = Mirror effect with bkgnd color For K20: 0-7 = wash 8-23 = Bkgnd rings selection 24-254 = wash 255 = Mirror effect with bkgnd color **Note:** Mirror effect unavailable for macro 31. Macro 67, 68, 69: the mirror effect is available only for options 1, 3, 9
31	24	Random explosion	**Yes**	**Yes**		**Yes**		0-255 → select random distribution	0 = Snap effect 1-255 = select the wake of the faded macro	
32	25	Segment 2	**Yes**	**Yes**		N.a.		0-255 → select shape width		
33	26	x Bump	**No**	**Yes**				0-255 → select macro offset	0 = Snap effect	
34	27	Image	**No**	**Yes**						
35	28	Bumping section	**Yes**	**Yes**						
36	29	Ramp by 6	**Yes**	**Yes**				0-255 → select shape width	0 = Snap effect 1-255 = select the wake of the faded macro	
37	30	Ramp by 4	**Yes**	**Yes**						
38	31	Left/Right scrolling bar	**Yes**	**Yes**						
39	32	Up/Down scrolling bar	**Yes**	**Yes**						
40	33	Bar 3	**Yes**	**Yes**				0-255 → select macro offset	0 = Snap effect 1-255 = Fade effect	
41	34	Vertical arc 1	**No**	**Yes**						
42	35	Vertical arc 2	**Yes**	**Yes**						
43	36	Horizontal arc 1	**No**	**Yes**						
44	37	Horizontal arc 2	**Yes**	**Yes**						
45	38	Mirrored pixel	**Yes**	**Yes**				0-255 → select shape width	0 = Snap effect 1-255 = select the wake of the faded macro	
46	39	Pixel animation 1	**Yes**	**Yes**						
47	40	Pixel animation 2	**Yes**	**Yes**						
48	41	Pixel animation 3	**Yes**	**Yes**						
49	42	Pixel animation 4	**Yes**	**Yes**						
50	43	Pixel animation 5	**Yes**	**Yes**						
51	44	Semi arc (Ramp -/+)	**Yes**	**Yes**						
52	45	Bumping arc section	**Yes**	**Yes**				0-255 → select macro offset	0 = Snap effect 1-255 = Fade effect	
53	46	Pixel animation 6	**Yes**	**Yes**						
54	47	Vertical ramp by 2	**Yes**	**Yes**				0-255 → select shape width	0 = Snap effect 1-255 = select the wake of the faded macro	
55	48	Following pixel by 2	**Yes**	**Yes**						
56	49	Syncopation	**Yes**	**Yes**				0-255 → select macro offset	0 = Snap effect 1-255 = Fade effect	
57	50	Bumping 1	**Yes**	**Yes**						
58	51	Bumping 2	**Yes**	**Yes**						
59	52	Bumping 3	**Yes**	**Yes**						
60	53	Vertical pixel scrolling	**Yes**	**Yes**				0-255 → select macro width	0 = Snap effect 1-255 = select the wake of the faded macro	
61	54	Random vertical section	**Yes**	**Yes**				0-255 → select random distribution	0 = Snap effect 1-255 = Fade effect	
62	55	Random central section	**Yes**	**Yes**		**Yes**				
63	56	Random ring 2	**Yes**	**Yes**		**Yes**				
64	57	Random ring 3	**No**	**Yes**		**Yes**				
65	58	Random ring 1+3	**Yes(*2)**	**Yes**		**Yes**				
66	59	Random ring 2+3	**Yes(*2)**	**Yes**		**Yes**				
67	60	Single pixel ring 1	**Yes**	**Yes**		N.a.		0-255 → select the number of rotating led in the ring. Available options: 1, 2, 3, 6, 9 The number of led depends on the ring size.	0 = Snap effect 1-255 = select the wake of the faded macro	
68	61	Single pixel ring 2	**Yes**	**Yes**						
69	62	Single pixel ring 3	**No**	**Yes**						
70	63	Spiral	**Yes**	**Yes**				0-255 → select macro width	0 = Snap effect 1-255 = select the wake of the faded macro	
71-255	64					N.a.	N.a.	N.a.	N.a.	

• SHAPE FADE

BIT	EFFECT
246-255	Smooth, fading curve with automatic gamma *
245	Smooth, fading curve gamma 2
243	Smooth, fading curve gamma 1,986
244	Smooth, fading curve gamma 1,993
⋮	
18	Smooth, fading curve gamma 0,513
17	Smooth, fading curve gamma 0,506
16	Smooth, fading curve gamma 0,5
0-15	Snap

• SHAPE TRANSITION

BIT	EFFECT
255	4 sec
⋮	
216	3 sec
⋮	
171	2 sec
⋮	
113	1 sec
⋮	
73	0,5 sec
⋮	
5	100 ms
0-4	No fade

• SHAPE RGBW
SHAPE DIMMER
BACKGROUND DIMMER

BIT	EFFECT
255	LED ON
0	LED OFF

• BACKGROUND SELECT

Aleda K10 - Background select

BIT	EFFECT
16-255	No selection
⋮	
15	Ring 2 + Ring 3
14	Pixel 1 + Ring 2 + Ring 3
13	Pixel 1 + Ring 2
12	Pixel 1 + Ring 3
11	Ring 3
10	Ring 2
9	Pixel 1
8	No selection

Aleda K20 - Background select

BIT	EFFECT
24-255	No selection
⋮	
23	Pixel 1 + Ring 2 + Ring 4
22	Pixel 1 + Ring 3 + Ring 4
21	Ring 2 + Ring 4
20	Pixel 1 + Ring 3
19	Ring 2 + Ring 3
18	Pixel 1 + Ring 4
17	Ring 3 + Ring 4
16	Ring 2 + Ring 3 + Ring 4
15	Pixel 1 + Ring 2 + Ring 3 + Ring 4
14	Pixel 1 + Ring 2 + Ring 3
13	Pixel 1 + Ring 2
12	Ring 4
11	Ring 3
10	Ring 2
9	Pixel 1
8	No selection

A.LEDA B-EYE K10 & K10 EASY

LED reference number for pixel mapping
TILT: channel 16 @ 200 bit

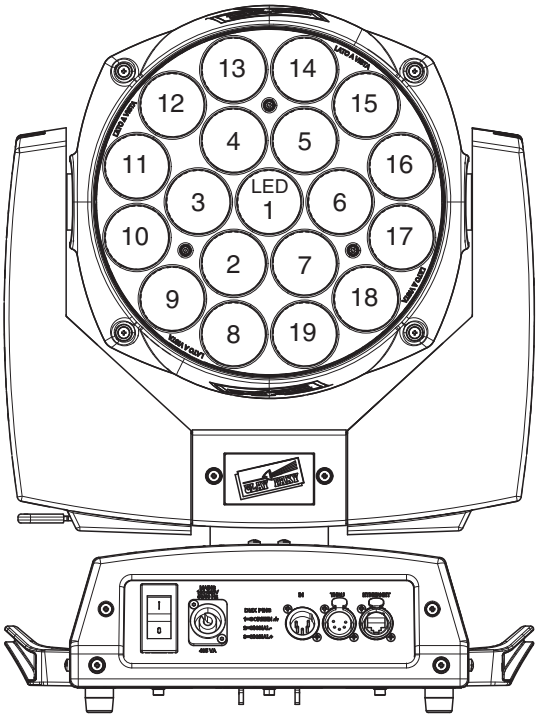

A.LEDA B-EYE K20

LED reference number for pixel mapping
TILT: channel 16 @ 200 bit

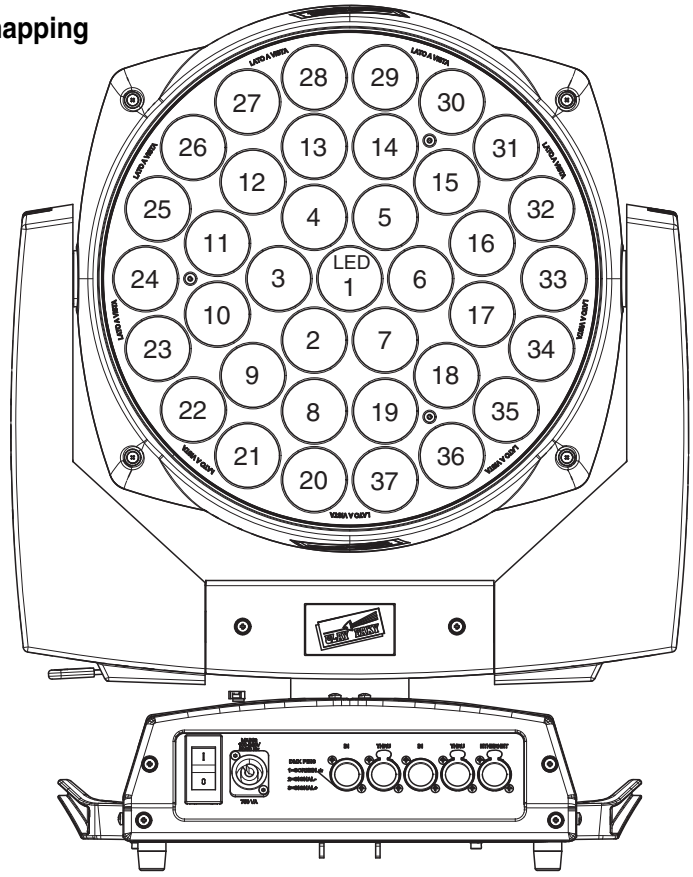

PRELIMINARY 06/14 Cod. IST009/001 EN gf|studio

CLAY PAKY S.p.A. - Via Pastrengo, 3/b - 24068 Seriate (BG) Italy - Tel. +39-035-654311 - Fax +39-035-301876 - **www.claypaky.it**